Oficina: Inovação Farmacêutica & Propriedade Intelectual

Universidade Federal do Ceará
Núcleo de Pesquisa e Desenvolvimento de Medicamentos
Fortaleza, CE
10 de abril de 2017

Apoiadores

Mantenedores da Academia Nacional de Farmácia

Uso Estratégico de Propriedade Intelectual e Informações Tecnológicas

Foco no Setor Farmacêutico

Universidade Federal do Ceará
Núcleo de Pesquisa e Desenvolvimento de Medicamentos
Fortaleza, CE

10 de abril de 2017

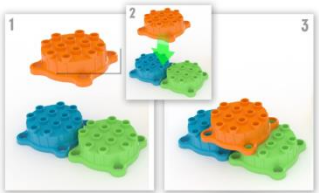

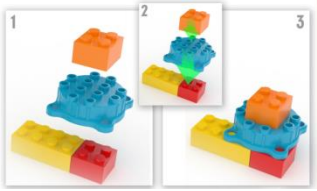

www.clevercaps.com.br

- Ministrante

Henry Suzuki

Sócio Diretor da Axonal Consultoria Tecnológica Ltda. (Brasil), Principal da Innovalyst LLC (Estados Unidos), Consultor Colaborador da Questel Consulting (França), Agente da Propriedade Industrial (INPI BR). Graduado em Farmácia e Bioquímica pela FCF-USP e pós-graduado em Administração de Empresas pela ESPM. Titular da Cadeira nº 2 da Academia Nacional de Farmácia. Empreendedor e Inventor. Membro da rede Mentores do Brasil.

henry.suzuki@axonal.com.br

AXONAL

Uso Estratégico de Propriedade Intelectual e Informações Tecnológicas

Foco no Setor Farmacêutico

- Agenda

  - Propriedade Intelectual no contexto farmacêutico, com destaque a patentes

  - Uso estratégico de patentes e informações patentárias

  - Ferramentas e técnicas de busca e análise de informações tecnológicas

  - Fontes, sistemas de busca e análise de informações com foco na área farmacêutica

  - Exemplo de mapeamento de segmento tecnológico

© 2016 www.axonal.com.br

Uso Estratégico de Propriedade Intelectual e Informações Tecnológicas

Foco no Setor Farmacêutico

- Agenda

- Propriedade Intelectual no contexto farmacêutico, com destaque a patentes

- Uso estratégico de patentes e informações patentárias

- Ferramentas e técnicas de busca e análise de informações tecnológicas

- Fontes, sistemas de busca e análise de informações com foco na área farmacêutica

- Exemplo de mapeamento de segmento tecnológico

© 2016 www.axonal.com.br

Inovação & Propriedade Intelectual

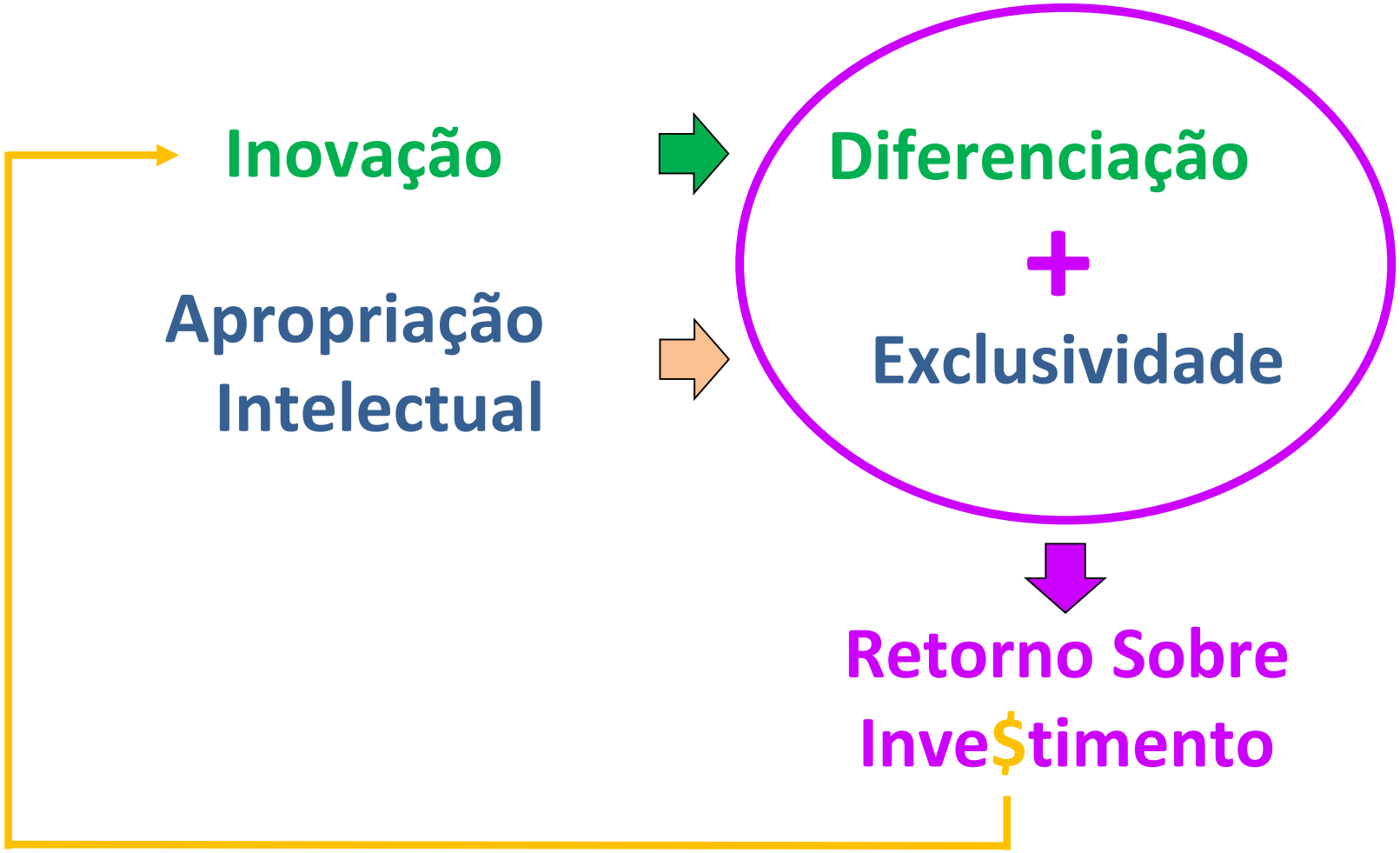

© 2016 www.axonal.com.br

Propriedade Intelectual em sua várias dimensões, com destaque a patentes

Antonio Ferro Ricci & Karin Klempp Franco, 2014. Curso de Contratos de Transferência de Tecnologia, ABAPI (Aula 1)

© 2016 www.axonal.com.br

Propriedade Intelectual em sua várias dimensões, com destaque a patentes

Marcas

Nomes Empresariais

Desenhos Industriais

Direitos Autorais

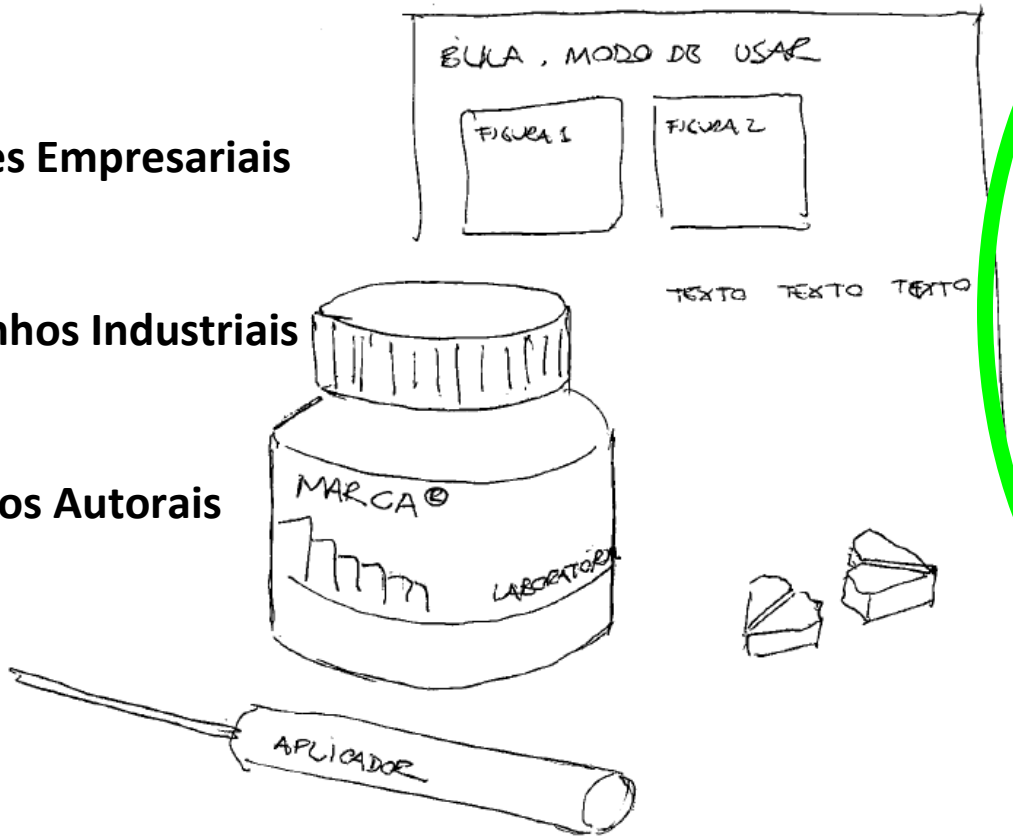

Patentes
Molécula
Processo de síntese
Processo de purificação
Sais
Formas cristalinas
Estabilização
Fórmula farmacêutica
Forma farmacêutica
Acondicionamento
Indicações
Combinações
Dispositivos
...

Segredos industriais

© 2016 www.axonal.com.br

Propriedade Intelectual em sua várias dimensões, com destaque a patentes

- O que é patente
- O que é patenteável
- O que não é patenteável
- Como é um documento de patente
- Como definir o escopo de proteção
- Como é o processo de patenteamento

© 2016 www.axonal.com.br

Propriedade Intelectual em sua várias dimensões, com destaque a patentes

- O que é patente
- O que é patenteável
- O que não é patenteável
- Como é um documento de patente
- Como definir o escopo de proteção
- Como é o processo de patenteamento

© 2016 www.axonal.com.br

O que é patente

- Patente é um título de propriedade que confere ao seu titular o direito de impedir terceiros explorarem sua invenção, em um determinado território, por um limitado período de tempo, em troca da descrição da invenção.

© 2016 www.axonal.com.br

O que é patente

- Patente é um **título de propriedade** que confere ao seu titular direito de impedir terceiros explorarem sua invenção, em um determinado território, por um limitado período de tempo, em troca da descrição da invenção.

Lei da Propriedade Industrial nº 9.279/96

http://www.planalto.gov.br/ccivil_03/leis/L9279.htm

Diversos Tratados Internacionais

© 2016 www.axonal.com.br

LEI Nº 9.279, DE 14 DE MAIO DE 1996.

Regula direitos e obrigações relativos à propriedade industrial.

O PRESIDENTE DA REPÚBLICA Faço saber que o Congresso Nacional decreta e eu sanciono a seguinte Lei:

DISPOSIÇÕES PRELIMINARES

Art. 1º Esta Lei regula direitos e obrigações relativos à propriedade industrial.

Art. 2º A proteção dos direitos relativos à propriedade industrial, considerado o seu interesse social e o desenvolvimento tecnológico e econômico do País, efetua-se mediante:

I - concessão de patentes de invenção e de modelo de utilidade;

II - concessão de registro de desenho industrial;

III - concessão de registro de marca;

IV - repressão às falsas indicações geográficas; e

V - repressão à concorrência desleal.

O que é patente

- Patente é um título de propriedade que confere ao seu titular o **direito de impedir terceiros explorarem sua invenção**, em um determinado território, por um limitado período de tempo, em troca da descrição da invenção.

Direito de Impedir Terceiros

≠

Direito de Explorar

© 2016 www.axonal.com.br

CAPÍTULO V
DA PROTEÇÃO CONFERIDA PELA PATENTE

Seção I
Dos Direitos

Art. 41. A extensão da proteção conferida pela patente será determinada pelo teor das reivindicações, interpretado com base no relatório descritivo e nos desenhos.

Art. 42. A patente confere ao seu titular o direito de impedir terceiro, sem o seu consentimento, de produzir, usar, colocar à venda, vender ou importar com estes propósitos:

I - produto objeto de patente;

II - processo ou produto obtido diretamente por processo patenteado.

§ 1º Ao titular da patente é assegurado ainda o direito de impedir que terceiros contribuam para que outros pratiquem os atos referidos neste artigo.

§ 2º Ocorrerá violação de direito da patente de processo, a que se refere o inciso II, quando o possuidor ou proprietário não comprovar, mediante determinação judicial específica, que o seu produto foi obtido por processo de fabricação diverso daquele protegido pela patente.

Art. 43. O disposto no artigo anterior não se aplica:

PATENTE (A) - HENRY

DISPOSITIVO PARA SENTAR
CARACTERIZADO POR
CONTER:

- QUATRO PÉS
- UM ASSENTO E
- UM ENCOSTO

© 2016 www.axonal.com.br

PATENTE (B) - ZÉ

DISPOSITIVO PARA SENTAR CONTENDO PELO MENOS UM PÉ E UM ASSENTO, CARACTERIZADO POR CONTER PELO MENOS UMA RODA DEBAIXO DE CADA PÉ

© 2016 www.axonal.com.br

PATENTE (A) - HENRY

DISPOSITIVO PARA SENTAR CARACTERIZADO POR CONTER:

- QUATRO PÉS
- UM ASSENTO E
- UM ENCOSTO

PATENTE (B) - ZÉ

DISPOSITIVO PARA SENTAR CONTENDO PELO MENOS UM PÉ E UM ASSENTO, CARACTERIZADO POR CONTER PELO MENOS UMA RODA DEBAIXO DE CADA PÉ

© 2016 www.axonal.com.br

PATENTE (C) - MARIA

DISPOSITIVO PARA SENTAR CONTENDO PELO MENOS UM PÉ E UM ASSENTO, CARACTERIZADO POR CONTER ADICIONALMENTE PELO MENOS UM BRAÇO

© 2016 www.axonal.com.br

PATENTE (D) - JOANA

DISPOSITIVO PARA SENTAR CONTENDO PELO MENOS UM PÉ E UM ASSENTO E PELO MENOS UM BRAÇO, CARACTERIZADO POR CONTER, ADICIONALMENTE PELO MENOS UMA MESA LIGADA A UM DOS BRAÇOS

© 2016 www.axonal.com.br

PATENTE (A) - HENRY
DISPOSITIVO PARA SENTAR CARACTERIZADO POR CONTER:

- QUATRO PÉS
- UM ASSENTO E
- UM ENCOSTO

PATENTE (D) - JOANA
DISPOSITIVO PARA SENTAR CONTENDO PELO MENOS UM PÉ E UM ASSENTO E PELO MENOS UM BRAÇO, CARACTERIZADO POR CONTER, ADICIONALMENTE PELO MENOS UMA MESA LIGADA AO BRAÇO

PATENTE (B) - ZÉ
DISPOSITIVO PARA SENTAR CONTENDO PELO MENOS UM PÉ E UM ASSENTO, CARACTERIZADO POR CONTER PELO MENOS UMA RODA DEBAIXO DE CADA PÉ

PATENTE (C) - MARIA
DISPOSITIVO PARA SENTAR CONTENDO PELO MENOS UM PÉ E UM ASSENTO, CARACTERIZADO POR CONTER ADICIONALMENTE PELO MENOS UM BRAÇO

© 2016 www.axonal.com.br

O que é patente

- Patente é um título de propriedade que confere ao seu titular direito de impedir terceiros explorarem sua invenção, **em um determinado território**, por um limitado período de tempo, em troca da descrição da invenção.

Para uma patente ter efeito em um determinado país, deverá ser depositada e concedida naquele país.

© 2016 www.axonal.com.br

O que é patente

- Patente é um título de propriedade que confere ao seu titular direito de impedir terceiros explorarem sua invenção, em um determinado território, **por um limitado período de tempo**, em troca da descrição da invenção.

Patente de Invenção: 20 Anos após o depósito
ou pelo menos 10 anos após a concessão

Patente de Modelo de Utilidade: 15 Anos após o depósito
ou pelo menos 7 anos após a concessão

© 2016 www.axonal.com.br

O que é patente

- Patente é um título de propriedade que confere ao seu titular o direito de impedir terceiros explorarem sua invenção, em um determinado território, por um limitado período de tempo, **em troca da descrição da invenção**.

O escopo de proteção de uma patente depende da descrição da invenção. Em determinados casos, a manutenção de segredo industrial pode ser mais adequada.

© 2016 www.axonal.com.br

Das Condições do Pedido

Art. 22. O pedido de patente de invenção terá de se referir a uma única invenção ou a um grupo de invenções inter-relacionadas de maneira a compreenderem um único conceito inventivo.

Art. 23. O pedido de patente de modelo de utilidade terá de se referir a um único modelo principal, que poderá incluir uma pluralidade de elementos distintos, adicionais ou variantes construtivas ou configurativas, desde que mantida a unidade técnico-funcional e corporal do objeto.

Art. 24. O relatório deverá descrever clara e suficientemente o objeto, de modo a possibilitar sua realização por técnico no assunto e indicar, quando for o caso, a melhor forma de execução.

Parágrafo único. No caso de material biológico essencial à realização prática do objeto do pedido, que não possa ser descrito na forma deste artigo e que não estiver acessível ao público, o relatório será suplementado por depósito do material em instituição autorizada pelo INPI ou indicada em acordo internacional.

Art. 25. As reivindicações deverão ser fundamentadas no relatório descritivo, caracterizando as particularidades do pedido e definindo, de modo claro e preciso, a matéria objeto da proteção.

Propriedade Intelectual em sua várias dimensões, com destaque a patentes

- O que é patente
- O que é patenteável
- O que não é patenteável
- Como é um documento de patente
- Como definir o escopo de proteção
- Como é o processo de patenteamento

© 2016 www.axonal.com.br

DAS INVENÇÕES E DOS MODELOS DE UTILIDADE PATENTEÁVEIS

Art. 8º É patenteável a invenção que atenda aos requisitos de novidade, atividade inventiva e aplicação industrial.

Art. 9º É patenteável como modelo de utilidade o objeto de uso prático, ou parte deste, suscetível de aplicação industrial, que apresente nova forma ou disposição, envolvendo ato inventivo, que resulte em melhoria funcional no seu uso ou em sua fabricação.

Art. 10. Não se considera invenção nem modelo de utilidade:

I - descobertas, teorias científicas e métodos matemáticos;

II - concepções puramente abstratas;

III - esquemas, planos, princípios ou métodos comerciais, contábeis, financeiros, educativos, publicitários, de sorteio e de fiscalização;

IV - as obras literárias, arquitetônicas, artísticas e científicas ou qualquer criação estética;

O que é patenteável

- É patenteável a invenção que atenda aos requisitos de novidade, atividade inventiva e aplicação industrial.

© 2016 www.axonal.com.br

O que é patenteável

- É patenteável a invenção que atenda aos requisitos de **novidade**, atividade inventiva e aplicação industrial.

© 2016 www.axonal.com.br

Art. 11. A invenção e o modelo de utilidade são considerados novos quando não compreendidos no estado da técnica.

§ 1º O estado da técnica é constituído por tudo aquilo tornado acessível ao público antes da data de depósito do pedido de patente, por descrição escrita ou oral, por uso ou qualquer outro meio, no Brasil ou no exterior, ressalvado o disposto nos arts. 12, 16 e 17.

§ 2º Para fins de aferição da novidade, o conteúdo completo de pedido depositado no Brasil, e ainda não publicado, será considerado estado da técnica a partir da data de depósito, ou da prioridade reivindicada, desde que venha a ser publicado, mesmo que subseqüentemente.

§ 3º O disposto no parágrafo anterior será aplicado ao pedido internacional de patente depositado segundo tratado ou convenção em vigor no Brasil, desde que haja processamento nacional.

Art. 12. Não será considerada como estado da técnica a divulgação de invenção ou modelo de utilidade, quando ocorrida durante os 12 (doze) meses que precederem a data de depósito ou a da prioridade do pedido de patente, se promovida:

I - pelo inventor;

II - pelo Instituto Nacional da Propriedade Industrial - INPI, através de publicação oficial do pedido de patente depositado sem o consentimento do inventor, baseado em informações deste obtidas ou em decorrência de atos por ele realizados; ou

O que é patenteável

- É patenteável a invenção que atenda aos requisitos de novidade, **atividade inventiva** e aplicação industrial.

© 2016 www.axonal.com.br

Art. 13. A invenção é dotada de atividade inventiva sempre que, para um técnico no assunto, não decorra de maneira evidente ou óbvia do estado da técnica.

Art. 14. O modelo de utilidade é dotado de ato inventivo sempre que, para um técnico no assunto, não decorra de maneira comum ou vulgar do estado da técnica.

O que é patenteável

- É patenteável a invenção que atenda aos requisitos de novidade, atividade inventiva e **aplicação industrial**.

© 2016 www.axonal.com.br

Art. 15. A invenção e o modelo de utilidade são considerados suscetíveis de aplicação industrial quando possam ser utilizados ou produzidos em qualquer tipo de indústria.

Propriedade Intelectual em sua várias dimensões, com destaque a patentes

- O que é patente
- O que é patenteável
- O que não é patenteável
- Como é um documento de patente
- Como definir o escopo de proteção
- Como é o processo de patenteamento

© 2016 www.axonal.com.br

Das Invenções e Dos Modelos de Utilidade Não Patenteáveis

Art. 18. Não são patenteáveis:

I - o que for contrário à moral, aos bons costumes e à segurança, à ordem e à saúde públicas;

II - as substâncias, matérias, misturas, elementos ou produtos de qualquer espécie, bem como a modificação de suas propriedades físico-químicas e os respectivos processos de obtenção ou modificação, quando resultantes de transformação do núcleo atômico; e

III - o todo ou parte dos seres vivos, exceto os microorganismos transgênicos que atendam aos três requisitos de patenteabilidade - novidade, atividade inventiva e aplicação industrial - previstos no art. 8º e que não sejam mera descoberta.

Parágrafo único. Para os fins desta Lei, microorganismos transgênicos são organismos, exceto o todo ou parte de plantas ou de animais, que expressem, mediante intervenção humana direta em sua composição genética, uma característica normalmente não alcançável pela espécie em condições naturais.

Art. 10. Não se considera invenção nem modelo de utilidade:

I - descobertas, teorias científicas e métodos matemáticos;

II - concepções puramente abstratas;

III - esquemas, planos, princípios ou métodos comerciais, contábeis, financeiros, educativos, publicitários, de sorteio e de fiscalização;

IV - as obras literárias, arquitetônicas, artísticas e científicas ou qualquer criação estética;

V - programas de computador em si;

VI - apresentação de informações;

VII - regras de jogo;

VIII - técnicas e métodos operatórios ou cirúrgicos, bem como métodos terapêuticos ou de diagnóstico, para aplicação no corpo humano ou animal; e

IX - o todo ou parte de seres vivos naturais e materiais biológicos encontrados na natureza, ou ainda que dela isolados, inclusive o genoma ou germoplasma de qualquer ser vivo natural e os processos biológicos naturais.

Propriedade Intelectual em sua várias dimensões, com destaque a patentes

- O que é patente
- O que é patenteável
- O que não é patenteável
- Como é um documento de patente
- Como definir o escopo de proteção
- Como é o processo de patenteamento

© 2016 www.axonal.com.br

Como é um documento de patente

Publicações de patentes têm uma estrutura padronizada, composta por:

- Titular
- Inventor
- Classificação
- Prioridade
- Anterioridades
- Resumo
- Relatório descritivo
- Reivindicações
- Desenhos (eventualmente)

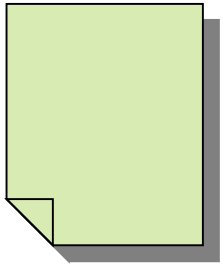

© 2016 www.axonal.com.br

US007146667B2

(12) **United States Patent**
Elsener

(10) **Patent No.: US 7,146,667 B2**
(45) **Date of Patent: Dec. 12, 2006**

(54) **POCKET TOOL**

(75) Inventor: **Carl Elsener**, Ibach (CH)

(73) Assignee: **Victorinox AG**, Ibach (CH)

(*) Notice: Subject to any disclaimer, the term of this patent is extended or adjusted under 35 U.S.C. 154(b) by 0 days.

(21) Appl. No.: **10/965,638**

(22) Filed: **Oct. 14, 2004**

(65) **Prior Publication Data**

US 2005/0081302 A1 Apr. 21, 2005

(30) **Foreign Application Priority Data**

Oct. 17, 2003 (AT) ..... A 1650/2003

(51) **Int. Cl.**
B26B 11/00 (2006.01)

(52) **U.S. Cl.** **7/118**; 7/170

(58) **Field of Classification Search** 7/118, 7/158, 170; 81/177.4; 365/200
See application file for complete search history.

(56) **References Cited**

U.S. PATENT DOCUMENTS

4,854,045 A * 8/1989 Schaub 30/155
6,273,582 B1 * 8/2001 Taggart et al. 362/119
6,341,423 B1 * 1/2002 Taggart et al. 30/169
6,394,813 B1 * 5/2002 Stout et al. 439/11
6,561,421 B1 * 5/2003 Yu 235/451
6,675,419 B1 * 1/2004 Rivera 7/128
2004/0080989 A1 * 4/2004 Yu 365/200

FOREIGN PATENT DOCUMENTS

JP 2003 - 10570 1/2003

* cited by examiner

Primary Examiner—David B. Thomas
(74) *Attorney, Agent, or Firm*—Fross Zelnick Lehrman & Zissu, P.C.; Philip T. Shannon, Esq.; Charles T. J. Weigell, Esq.

(57) **ABSTRACT**

The invention specifies a pocket tool, particularly a pocket knife (**1**) or plate-like tool card, comprising a housing (**2**) with at least one receiving area (**10**), and at least two functional components (**11**) movable from a storage position within the receiving area (**10**), into a working position outside of the receiving area (**10**). The first functional component (**11**) is designed as a tool, particularly a pair of scissors (**16**) or knife (**1**). The second functional component (**11**) has a support casing (**25**) and is equipped with a recordable and readable, nonvolatile memory, as well as with an interface (**24**). A releasable locking device and a longitudinal guide or pivot bearing are arranged between the support casing (**25**) of the second functional component (**11**) and the housing (**2**).

118 Claims, 14 Drawing Sheets

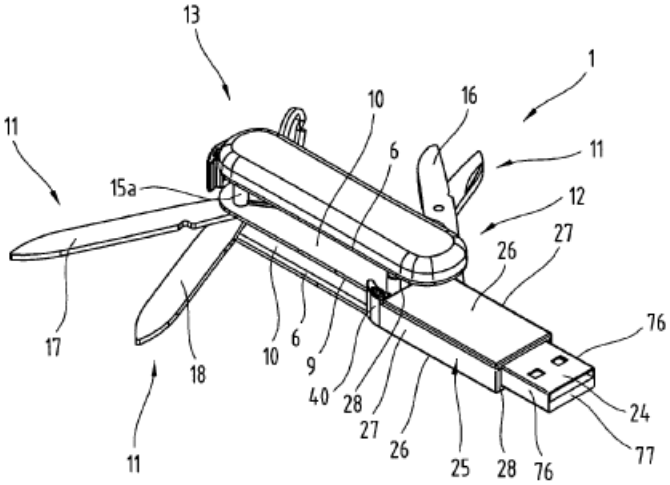

Fig.3

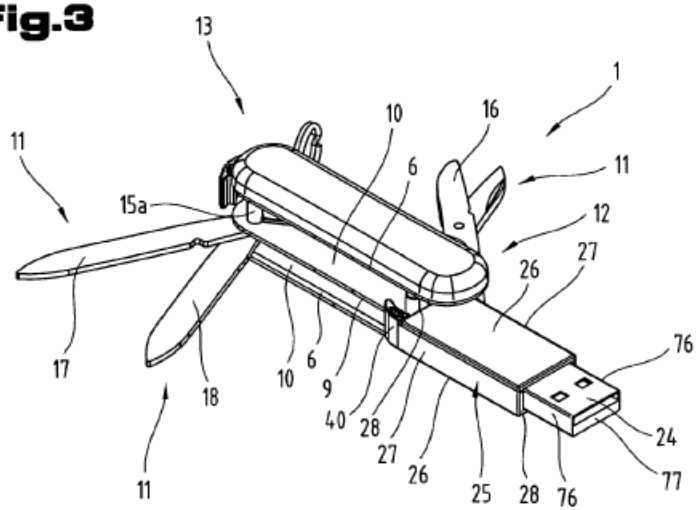
13
1
10
16
11
6
11
15a
12
27
26
76
17
18
10
6
9
40
28
27
26
25
28
76
24
77
11

Fig.4

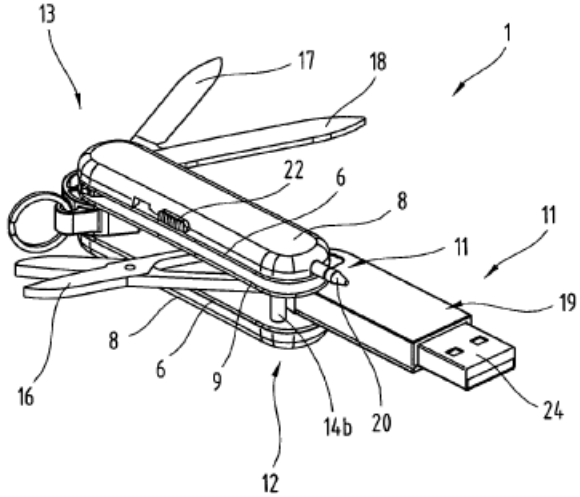
13
17
18
1
22
6
8
11
11
19
8
6
9
16
14b
20
24
12

Fig.5

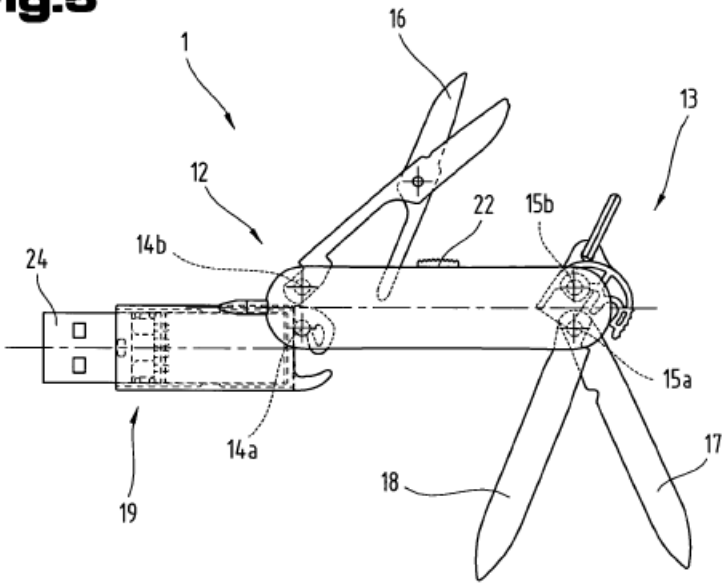
1
16
13
12
22
15b
14b
24
15a
14a
17
18
19

Fig.11

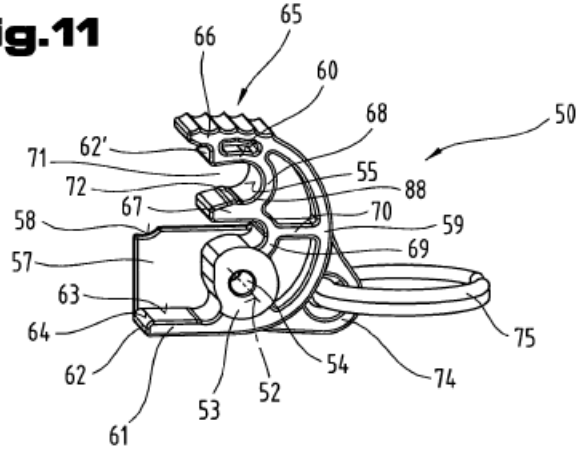
65
66
60
68
50
62'
71
55
72
88
67
70
58
59
69
57
63
64
75
54
62
74
52
53
61

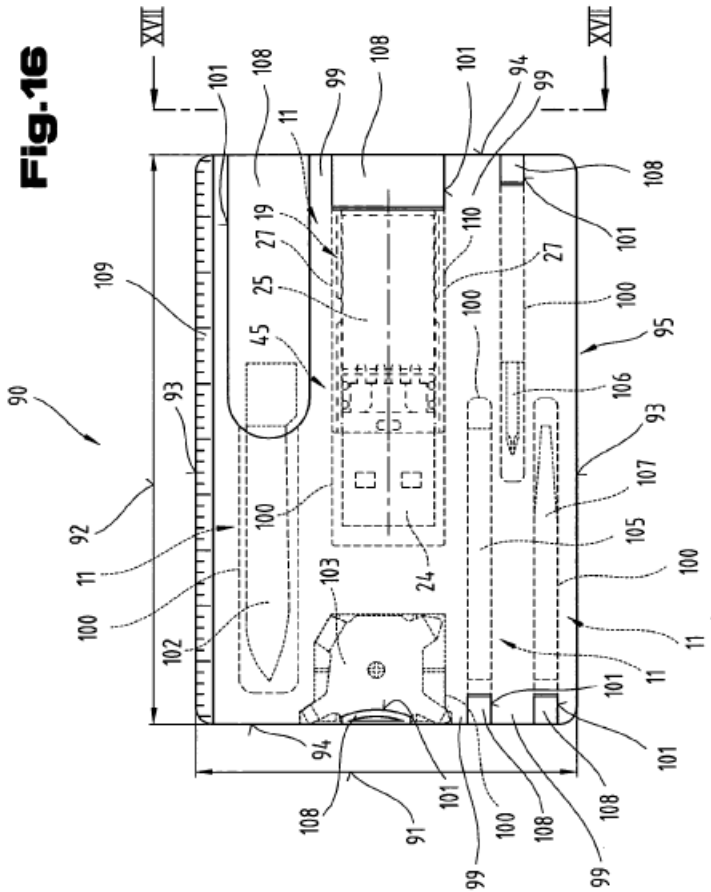
XVII
XVII
90
91
92
93
94
95
99
100
101
102
103
105
106
107
108
109
110
11
19
24
25
27
45

Fig.16

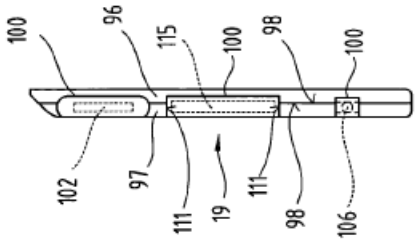
100
96
115
100
98
100
102
97
111
19
111
98
106

Fig.17

Fig.19

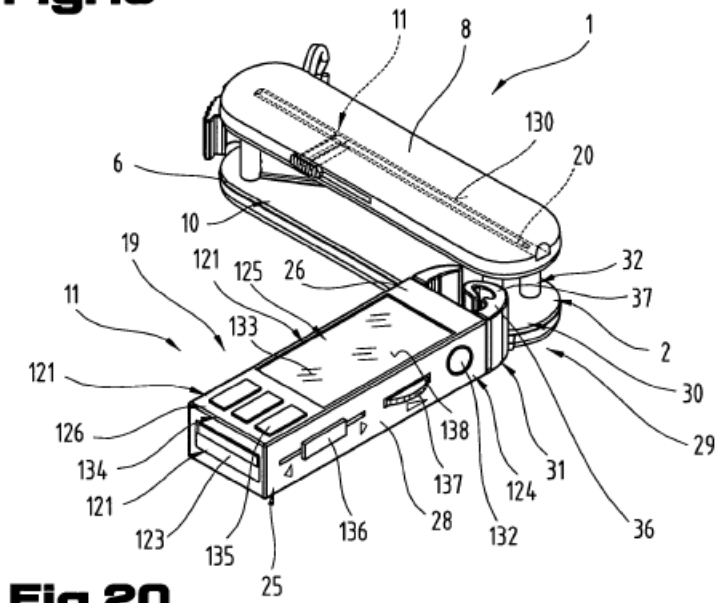

Fig.20

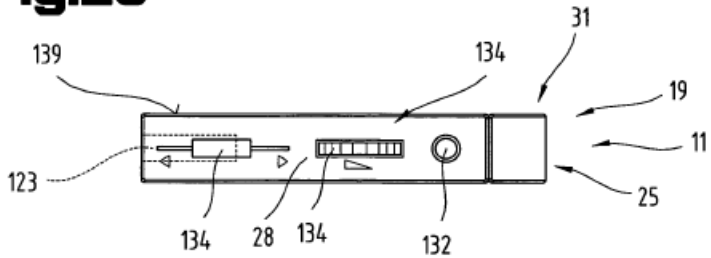

Fig.21

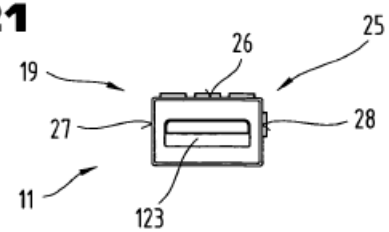

POCKET TOOL

CROSS REFERENCE TO RELATED APPLICATIONS

Applicant claims priority under 35 U.S.C. §119 of AUSTRIAN Patent Application No. A 1650/2003 filed on Oct. 17, 2003.

BACKGROUND OF THE INVENTION

1. Field of the Invention

The invention relates to a pocket tool as defined in the introductory parts of claims **1** and **44**. Furthermore, it relates to a functional component as defined in the introductory part of claim **116**.

2. The Prior Art

Different designs of pocket tools in the form of pocket knifes or plate-shaped tool cards are known from WO 01/39629 A1 and CH 686 173 A5. Such tools comprise a housing with at least one receiving area and a number of functional components that are movable from a storage position within the receiving area, to a working position outside of the receiving area. On the one hand, such functional components are formed by tools such as, for example a pair of scissors, a knife, a screwdriver and the like, and by utensils such as, for example tooth picks, pincers or cleaning needles, on the other hand. The functionality of such known pocket tools is extended in that a battery-buffered random access memory (RAM) main memory, or a read-only memory (ROM) memory is arranged within the housing. Said memories are arranged locally fixed in the pocket knife. Programs or data can be stored in and recalled from such memories. The main memory is referred to also as a so-called volatile storage because it has to be supplied with the required voltage, so it will not lose the memory contents even if the supply voltage is shut off. Arranging the required battery in the housing leads to an overall enlargement of the size of the pocket tool, or that only a few functional components can be arranged in the housing with comparatively no change in the outside dimensions.

If the memory is designed as a ROM memory, data can only by read out from the memory; however, no data can be written into the memory, which means the user can exclusively utilize the data or programs preset by the manufacturer of the pocket tool, which highly restricts the field of application of such a pocket tool.

Furthermore, a multifunctional tool is known from WO 99/56918 A1, which has at least one measuring, input and display device for at least one physical quantity, said device being arranged in or on the tool. The display device may be formed in this connection by an LCD display serving for the visual output of physical quantities. The measuring and display device can be supplied with current by means of a battery and/or a solar cell. Furthermore, provision may be made in or on the tool for an interface in order to input data for the measuring and display device, and to transmit data from the latter. For converting the measured and/or input value into an electrical signal, provision can be made for a converter or microprocessor for converting the electrical signal into a standardized physical unit.

Such a multifunctional tool does in fact extend the functionality of a pocket knife or manual tool; however, the scope of functions is exclusively limited to the processing of detectable measured physical values.

The pocket tools known from the prior art are generally found to be lacking with respect to their capability of processing digital data and outputting the latter in a form the user can detect, so there is a demand for additionally extending the scope of functions of pocket tools, while maintaining at the same time in the usual manner the scope of functions to which the user is accustomed to, such functions being achievable with functional tools or components such as, e.g. screwdrivers, knifes, scissors, and utensils such as, e.g. toothpicks etc.

SUMMARY OF THE INVENTION

The present invention is based on the problem to extend the range of application of a pocket tool without influencing thereby the dimensions of the pocket tool as such. A part problem of the present invention consists in expanding the scope of functions and the range of application of the pocket tool with respect to its capability of processing digital data, the objective being to maintain the mechanical functionality through the availability of tools and utensils.

The problem of the invention is resolved by the features defined herein. The benefits resulting from said features include that the second functional component in the form of an electronic module can be moved for its application into a position outside of the receiving range of the pocket tool, achieving in this manner superior accessibility particularly to the interface. In the nonvolatile storage, it is possible to write in and read out data, for example text data or data as video and language information and the like, and programs, e.g. application programs and the like, whereby the nonvolatile storage is wherein contrary to the known volatile main memories, where data and programs can be read in and written out as well, the electrical energy supply can be dispensed with, and the space volume otherwise required for accommodating, e.g. a battery in the housing, can be used either as an additional storage space or for additional tools. The functionality of the pocket tools, and in particular the memory capacity or the range of application as a tool can be significantly raised in this way without substantially increasing its outside dimensions. It is advantageous also that a releasable locking device is arranged between the functional component and the housing, because any unintentional removal of the functional component from its storage position, for example, is excluded to the greatest possible extent. The longitudinal guide or pivot-mount between the support casing of the second functional component, and the housing of the pocket tool effect a smooth movement of the second functional component vis-à-vis the receiving area or a bearing axle arranged in the housing.

One embodiment is advantageous in that, on the one hand, the memory and the control circuit and/or at least one peripheral are arranged within the support casing, which is enclosed on all sides and consequently protected from environmental influences such as, e.g. moisture, dust and the like; and that the support casing has high mechanical stability and is insensitive to pressure stress, on the other hand. The interface represents a link between the memory and an external EDP system.

As disclosed, it is also possible to maintain a standardized length of a pocket tool known in the prior art.

Beneficial sequence activities for the second functional component are also disclosed.

Further developments of the invention are advantageous in that the second functional component forming the electronics module is, in its working position, now completely separated from the housing, and can be used independently of the latter. Particularly the increasingly stricter security regulations in airline traffic prohibit passengers from using

be parameterized in a manner simple for the user. Particularly intuitive and user-friendly control is feasible via a user surface allotted to the controlling device, and by means of an electronic position detection system, particularly a touch screen, it is possible to provide a particularly compact structure of the control circuit, display and controlling device with just a few individual components.

Other useful exemplified embodiments of the pocket tool are disclosed that provide for simple controllability and adjustability of the functions of the control circuit.

Another useful embodiment of a peripheral, whereby it is advantageous particularly on account of an energy supply device formed by a self-sufficient energy storage according to claim **112**, is that the pocket tool is not restricted in its mobility, and that the control circuit can be operated substantially without being dependent on any location. Particularly chemoelectrical energy storage means and especially rechargeable batteries can be employed in this connection, for example such as lithium or lithium-polymer accumulators, or one-way batteries.

Furthermore, a disclosed design variation is beneficial in that owing to the energy supply system provided in the pocket tool in the form of electrical conductors, the pocket tool either does not require its own energy storage means because electrical energy is supplied to the control circuit and to peripherals via the electrical conductors, or the energy storage means arranged in the pocket tool is rechargeable via the electrical conductors.

The invention further contemplates and discloses advantageous design variations for arranging the control circuit and at least one peripheral.

A further, independent solution to the problem as defined by the invention relates to another disclosed functional component. The benefit ensuing therefrom lies mainly in the fact that the first coupling component of the functional component serving for the connection to the other coupling component, comprises at the same time the bearing component, forming a pivot-mounted bearing site. The capability of the functional component of swiveling out of a receiving area in the housing of the pocket tool is therefore provided via the first coupling component, and the functional component can be released from the housing of the pocket tool in its swiveled-out condition.

BRIEF DESCRIPTION OF THE DRAWINGS

The invention is explained in greater detail in the following with the help of the exemplified embodiments shown in the drawings, in which:

FIGS. **1** and **2** show perspective views of the pocket knife as defined by the invention, with an electronics module set to the storage position within the receiving area.

FIGS. **3** and **4** show perspective views of the pocket knife according to FIGS. **1** and **2**, with the tools swiveled out, and the electronics module swiveled out into the position in which it is used.

FIG. **5** is a side view of the pocket knife according to FIG. **4**.

FIG. **6** is a side view of the pocket knife according to FIG. **2**.

FIG. **7** is a section along lines VII—VII in FIG. **6**.

FIG. **8** is a perspective view of the pocket knife with the electronics module set to a removal position.

FIG. **9** is a side view of the pocket knife according to FIG. **8**.

FIG. **10** shows an enlargement of a cutout of the pocket knife according to FIG. **9**, with the pivot-mount arranged between the support casing of the electronics module and the housing of the pocket knife, as well as its coupling device with a first design of the coupling components.

FIG. **11** is a perspective view of the closing cap for protecting the interface of the electronics module, the latter being fully pivoted into its storage position.

FIG. **12** is another side view and simplified representation of a coupling component of the coupling device of the pivot bearing.

FIG. **12***a* is a side view of a part section of the pocket knife with another design of a pivot bearing, and of a part section of the electronics module, the latter being inseparable from the housing.

FIG. **13** is a perspective view of the pocket knife, with the electronics module completely detached and separated from its casing.

FIG. **14** is a side view of the pocket knife and electronics module shown in a preliminary position prior to coupling it with the second coupling component of the housing.

FIG. **15** is a side view of a part section of the pocket knife and electronics module in a preliminary position prior to uncoupling it from the second coupling component of the housing.

FIG. **16** is a top view of a plate-like tool card shown by a highly simplified representation.

FIG. **17** is a highly simplified view of the tool card according to FIG. **16** according to lines XVII—XVII.

FIG. **18** is a longitudinal section and highly simplified representation of another possible design variation of a locking device disposed between the support casing of the electronics module and the housing of the tool card.

FIG. **19** is a perspective view of another design variation of the pocket knife with an electronics module comprising a control circuit and peripherals.

FIG. **20** is a side view of the electronics module according to FIG. **19**.

FIG. **21** is a front view of the electronics module according to FIG. **19**.

FIG. **22** shows a block diagram of the control circuit with different peripherals connected to said circuit.

FIG. **23** is a perspective view of anther design variation of the pocket knife, with electronic components integrated in the housing.

FIG. **24** is a perspective view of another design variation of the pocket knife, with an electronics module detachable from the housing, and with electronic components arranged in the housing of the pocket tool.

FIG. **25** is a top view of a possible design variation of the pocket knife, with a plate-like electronics module.

FIG. **26** is a perspective view of another design variation of the pocket knife, with an external controlling unit for controlling the control circuit, and an external data medium.

FIG. **27** is a perspective view of yet another design variation of the pocket knife, with a plurality of electronics modules equipped in different ways.

FIG. **28** is a perspective view of yet another design variation of the pocket knife, with input/output devices provided on the cover plate; and

FIG. **29** is a perspective view of a possible design variation of a tool card comprising the electronics module.

DETAILED DESCRIPTION OF PREFERRED EMBODIMENTS

It is noted herewith by way of introduction that in the different embodiments described herein, identical components are provided with identical reference numerals and

-continued

LIST OF REFERENCE NUMERALS	
70	Connection wall
71	Receiving slot
72	Detent nose
73	Locking device
74	Flange
75	Key ring
76	Narrow-side wall
77	Face side
78	Angle
79	Pivot bearing area
80	Bearing bore
81	Adapter
82	Plug socket
83	Arrow
84	Arrow
85	Arrow
86	Arrow
88	Depression
90	Tool card
91	Width
92	Length
93	Longitudinal side surface
94	Transverse side surface
95	Housing
96	Base plate
97	Cover plate
98	Side surface
99	Partition
100	Receiving area
101	Receiving opening
102	Knife
103	Multifunctional tool
105	Pincers
106	Phillips screwdriver
107	Toothpick
108	Handle
109	Rule
110	Longitudinal guide
111	Guide surface
112	Side surface
113	Detent nose
114	Detent deepening
115	Memory card
120	Control circuit
121	Peripheral
122	Storage element
123	Data interface
124	Input/output interface
125	Input/output device
126	Operating system
127	Energy supply system
128	Signal and/or data bus
129	Storage element
130	Longitudinal guide
131	Plug socket
132	Jack
133	Display
134	Input element
135	Key elements
136	Sliding key
137	Controller
138	Representation zone
139	Outside surface
140	Broad side
141	Narrow side
142	Face side
143	Module frame
144	Coupling device
145	Coupling element
146	Coupling element
147	Contact element
148	Contact element
149	Bus interface
150	Riveted pin
151	Operating unit
152	Transmission line
153	Loudspeaker

-continued

LIST OF REFERENCE NUMERALS	
154	Mass storage
155	Transmitter and/or receiver
156	Connection system
157	Snap arm
158	Recess
159	Picture detection system
160	Sound pick-up

What is claimed is:

1. A pocket tool, particularly a pocket knife or plate-like tool card, comprising a housing with at least one receiving area, and at least two functional components moveable from a storage position within the receiving area, into a working position outside of the receiving area, of which a first functional component is designed as a tool, particularly a pair of scissors, a knife or a utensil, in particular a toothpick, pincers, cleaning needle, writing pen, wherein a second functional component has a support casing and is equipped with a recordable and readable, nonvolatile memory, as well as an interface; and at least one releasable locking device and a longitudinal guide or a pivot bearing are arranged between the support bearing of the second functional component, and the housing.

2. The pocket tool according to claim **1**, wherein the particularly oblong support casing of the second functional component comprises two parallel broad-side walls opposing one another; two parallel narrow-side walls extending substantially vertically between the broad-side walls and opposing one another; as well as two narrow-side walls opposing each other on the face side; and the memory is arranged within the support casing and the interface on one of the narrow-side walls on the face side.

3. The pocket tool according to claim **1**, wherein the second functional component has only a part of the length of the housing.

4. The pocket tool according to claim **1**, wherein the second functional component is adapted to pivot.

5. The pocket tool according to claim **1**, wherein the second functional component is extractable.

6. The pocket tool according to claim **1**, wherein the second functional component is separable from the housing.

7. The pocket tool according to claim **1**, wherein the pivot bearing is equipped with a coupling device comprising coupling components engageable with and releasable from each other, whereby the support casing is provided with the first coupling component in one of its end areas, and the housing with the second coupling component in one of its face-side end areas.

8. The pocket tool according to claim **7**, wherein the second coupling component is formed by a bearing axle, particularly a connection pin immovably arranged in the housing and extending perpendicular to the broad-side walls of the support casing.

9. The pocket tool according to claim **7**, wherein the second coupling component is formed by an adapter pivot-mounted on the bearing axle immovably arranged in the housing and extending perpendicular to the broad-side walls of the support casing.

10. The pocket tool according to claim **9**, wherein the adapter and the support casing each have at least one plug or detent or snap element; and that the second functional component is releasably connected with the adapter via a plug or detent or snap connection.

What is claimed is:

1. A pocket tool, particularly a pocket knife or plate-like tool card, comprising a housing with at least one receiving area, and at least two functional components moveable from a storage position within the receiving area, into a working position outside of the receiving area, of which a first functional component is designed as a tool, particularly a pair of scissors, a knife or a utensil, in particular a toothpick, pincers, cleaning needle, writing pen, wherein a second functional component has a support casing and is equipped with a recordable and readable, nonvolatile memory, as well as an interface; and at least one releasable locking device and a longitudinal guide or a pivot bearing are arranged between the support bearing of the second functional component, and the housing.

2. The pocket tool according to claim **1**, wherein the particularly oblong support casing of the second functional component comprises two parallel broad-side walls opposing one another; two parallel narrow-side walls extending substantially vertically between the broad-side walls and opposing one another; as well as two narrow-side walls opposing each other on the face side; and the memory is arranged within the support casing and the interface on one of the narrow-side walls on the face side.

3. The pocket tool according to claim **1**, wherein the second functional component has only a part of the length of the housing.

Propriedade Intelectual em sua várias dimensões, com destaque a patentes

- O que é patente
- O que é patenteável
- O que não é patenteável
- Como é um documento de patente
- Como definir o escopo de proteção de uma patente
- Como é o processo de patenteamento

CAPÍTULO V
DA PROTEÇÃO CONFERIDA PELA PATENTE

Seção I
Dos Direitos

Art. 41. A extensão da proteção conferida pela patente será determinada pelo teor das reivindicações, interpretado com base no relatório descritivo e nos desenhos.

Art. 42. A patente confere ao seu titular o direito de impedir terceiro, sem o seu consentimento, de produzir, usar, colocar à venda, vender ou importar com estes propósitos:

I - produto objeto de patente;

II - processo ou produto obtido diretamente por processo patenteado.

§ 1º Ao titular da patente é assegurado ainda o direito de impedir que terceiros contribuam para que outros pratiquem os atos referidos neste artigo.

Como definir a extensão da cobertura de uma patente - Interpretação

... caracterizado por: A & B & C

- Protege: ... & **A** & **B** & **C**

  ... & A & **B** & **C** & **D**

  ... & **A** & **B** & **C**

- Não Protege: ... & (**A** & **B**) ñ **C**

© 2016 www.axonal.com.br

Propriedade Intelectual em sua várias dimensões, com destaque a patentes

- O que é patente
- O que é patenteável
- O que não é patenteável
- Como é um documento de patente
- Como definir o escopo de proteção
- Como é o processo de patenteamento

© 2016 www.axonal.com.br

Como é o processo de patenteamento

- Busca prévia (estado da técnica)
- Definição do escopo da invenção, redação do pedido
- Depósito do primeiro pedido (T_0)
- Depósitos internacionais (T_{12} ou T_{30})
- Publicação dos pedidos até então depositados (T_{18})
- Pagamento da taxa para exame técnico pelo INPI (T_{20-36})
- Exame técnico / Adequação do pedido ($\sim T_{50-60}$)
- Deferimento do pedido
- Expedição da Carta Patente ($\sim T_{70-100}$)
- Nulidade administrativa ou judicial

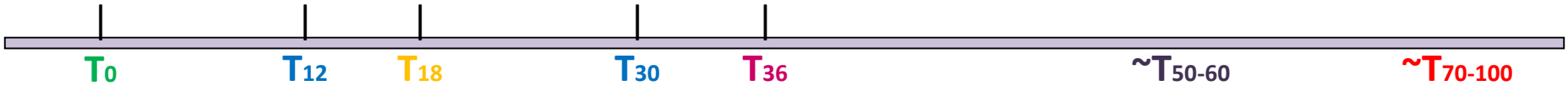

© 2016 www.axonal.com.br

Como é o processo de patenteamento

- **Busca prévia (estado da técnica)**
- Definição do escopo da invenção, redação do pedido
- Depósito do primeiro pedido (**T_0**)
- Depósitos internacionais (**T_{12}** ou **T_{30}**)
- Publicação dos pedidos até então depositados (**T_{18}**)
- Pagamento da taxa para exame técnico pelo INPI (**T_{20-36}**)
- Exame técnico / Adequação do pedido (**~T_{50-60}**)
- Deferimento do pedido
- Expedição da Carta Patente (**~T_{70-100}**)
- Nulidade administrativa ou judicial

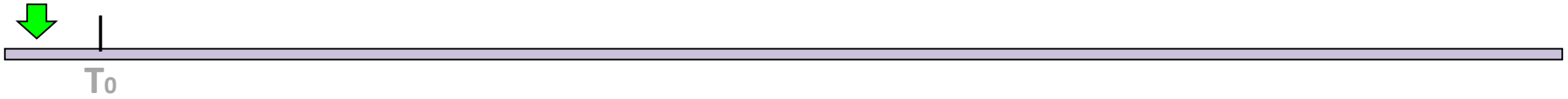

© 2016 www.axonal.com.br

Como é o processo de patenteamento

- Busca prévia (estado da técnica)
- **Definição do escopo da invenção, redação do pedido**
- Depósito do primeiro pedido (**T_0**)
- Depósitos internacionais (**T_{12}** ou **T_{30}**)
- Publicação dos pedidos até então depositados (**T_{18}**)
- Pagamento da taxa para exame técnico pelo INPI (**T_{20-36}**)
- Exame técnico / Adequação do pedido (**~T_{50-60}**)
- Deferimento do pedido
- Expedição da Carta Patente (**~T_{70-100}**)
- Nulidade administrativa ou judicial

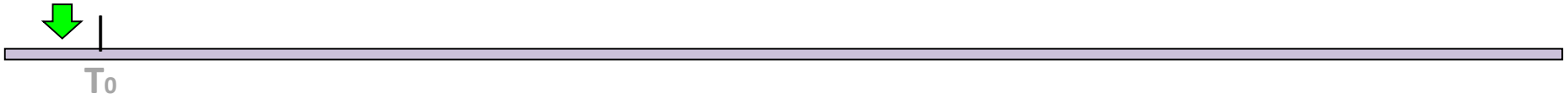

© 2016 www.axonal.com.br

Como é o processo de patenteamento

- Busca prévia (estado da técnica)
- Definição do escopo da invenção, redação do pedido
- **Depósito do primeiro pedido (T_0)**
- Depósitos internacionais (**T_{12}** ou **T_{30}**)
- Publicação dos pedidos até então depositados (**T_{18}**)
- Pagamento da taxa para exame técnico pelo INPI (**T_{20-36}**)
- Exame técnico / Adequação do pedido (**~T_{50-60}**)
- Deferimento do pedido
- Expedição da Carta Patente (**~T_{70-100}**)
- Nulidade administrativa ou judicial

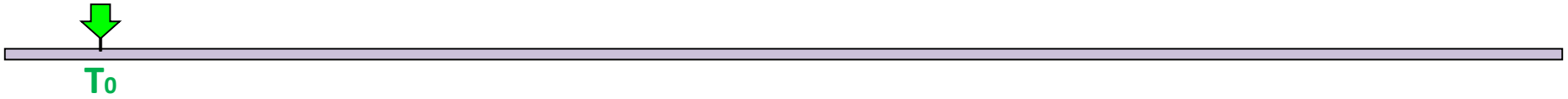

© 2016 www.axonal.com.br

Como é o processo de patenteamento

- Busca prévia (estado da técnica)
- Definição do escopo da invenção, redação do pedido
- Depósito do primeiro pedido (T_0)
- **Depósitos internacionais (T_{12} ou T_{30})**
- Publicação dos pedidos até então depositados (T_{18})
- Pagamento da taxa para exame técnico pelo INPI (T_{20-36})
- Exame técnico / Adequação do pedido ($\sim T_{50-60}$)
- Deferimento do pedido
- Expedição da Carta Patente ($\sim T_{70-100}$)
- Nulidade administrativa ou judicial

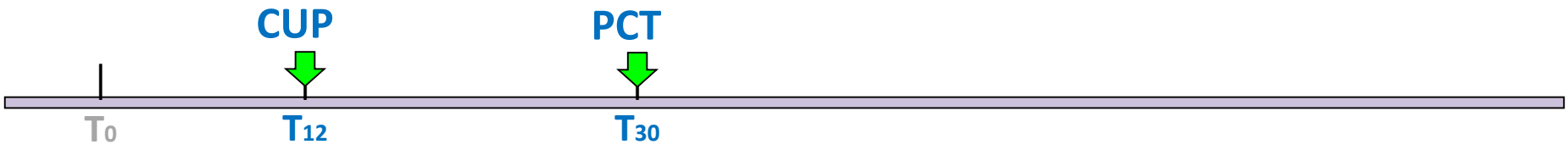

© 2016 www.axonal.com.br

Como é o processo de patenteamento

- Busca prévia (estado da técnica)
- Definição do escopo da invenção, redação do pedido
- Depósito do primeiro pedido (T_0)
- Depósitos internacionais (T_{12} ou T_{30})
- **Publicação dos pedidos até então depositados (T_{18})**
- Pagamento da taxa para exame técnico pelo INPI (T_{20-36})
- Exame técnico / Adequação do pedido ($\sim T_{50-60}$)
- Deferimento do pedido
- Expedição da Carta Patente ($\sim T_{70-100}$)
- Nulidade administrativa ou judicial

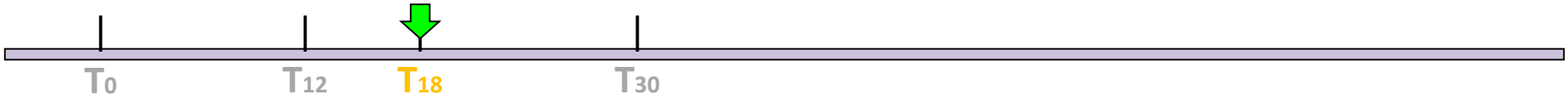

© 2016 www.axonal.com.br

Como é o processo de patenteamento

- Busca prévia (estado da técnica)
- Definição do escopo da invenção, redação do pedido
- Depósito do primeiro pedido (T_0)
- Depósitos internacionais (T_{12} ou T_{30})
- Publicação dos pedidos até então depositados (T_{18})
- **Pagamento da taxa para exame técnico pelo INPI (T_{20-36})**
- Exame técnico / Adequação do pedido ($\sim T_{50-60}$)
- Deferimento do pedido
- Expedição da Carta Patente ($\sim T_{70-100}$)
- Nulidade administrativa ou judicial

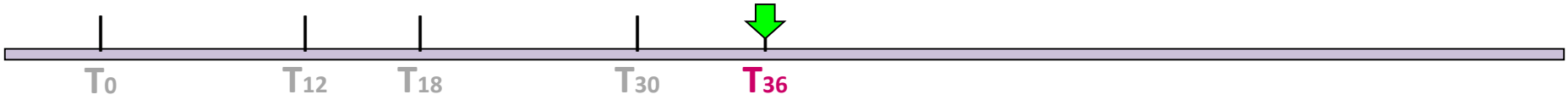

© 2016 www.axonal.com.br

Como é o processo de patenteamento

- Busca prévia (estado da técnica)
- Definição do escopo da invenção, redação do pedido
- Depósito do primeiro pedido (T_0)
- Depósitos internacionais (T_{12} ou T_{30})
- Publicação dos pedidos até então depositados (T_{18})
- Pagamento da taxa para exame técnico pelo INPI (T_{20-36})
- **Exame técnico / Adequação do pedido ($\sim T_{50-60}$)**
- Deferimento do pedido
- Expedição da Carta Patente ($\sim T_{70-100}$)
- Nulidade administrativa ou judicial

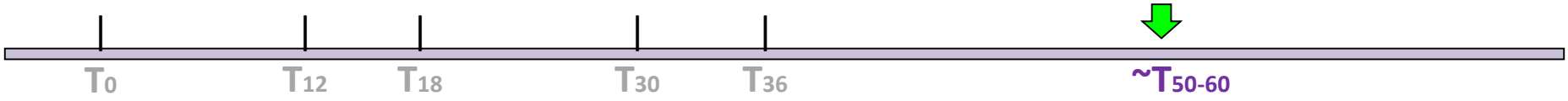

© 2016 www.axonal.com.br

Como é o processo de patenteamento

- Busca prévia (estado da técnica)
- Definição do escopo da invenção, redação do pedido
- Depósito do primeiro pedido (T_0)
- Depósitos internacionais (T_{12} ou T_{30})
- Publicação dos pedidos até então depositados (T_{18})
- Pagamento da taxa para exame técnico pelo INPI (T_{20-36})
- Exame técnico / Adequação do pedido ($\sim T_{50-60}$)
- **Deferimento do pedido**
- **Expedição da Carta Patente ($\sim T_{70-100}$)**
- Nulidade administrativa ou judicial

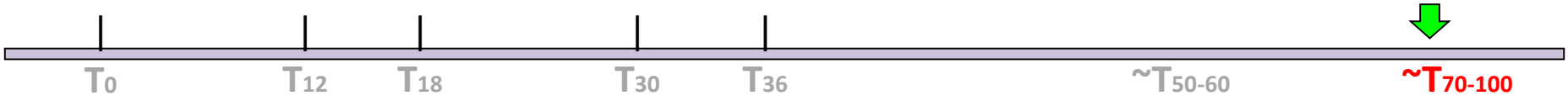

© 2016 www.axonal.com.br

Como é o processo de patenteamento

- Busca prévia (estado da técnica)
- Definição do escopo da invenção, redação do pedido
- Depósito do primeiro pedido (**T_0**)
- Depósitos internacionais (**T_{12}** ou **T_{30}**)
- Publicação dos pedidos até então depositados (**T_{18}**)
- Pagamento da taxa para exame técnico pelo INPI (**T_{20-36}**)
- Exame técnico / Adequação do pedido (**$\sim T_{50-60}$**)
- Deferimento do pedido
- Expedição da Carta Patente (**$\sim T_{70-100}$**)
- **Nulidade administrativa ou judicial**

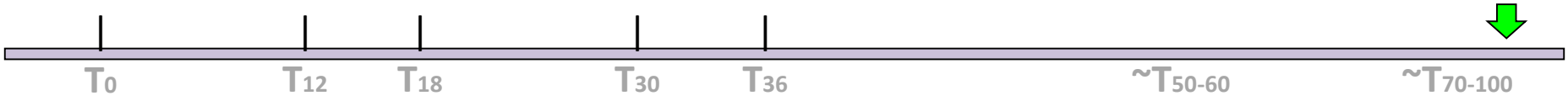

© 2016 www.axonal.com.br

Uso Estratégico de Propriedade Intelectual e Informações Tecnológicas

Foco no Setor Farmacêutico

- Agenda

  - Propriedade Intelectual no contexto farmacêutico, com destaque a patentes

  - Uso estratégico de patentes e informações patentárias

  - Ferramentas e técnicas de busca e análise de informações tecnológicas

  - Fontes, sistemas de busca e análise de informações com foco na área farmacêutica

  - Exemplo de mapeamento de segmento tecnológico

© 2016 www.axonal.com.br

Uso Estratégico de Propriedade Intelectual em Negócios

Fatores de Sucesso em Negócios e Competências de Propriedade Intelectual

Legenda:

Necessidades de Negócio

Funções de Propriedade Intelectual

Adaptado de: Paul Germeraad & Arvin Patel. "Why Intellectual Property is the Key to Success in the Knowledge Economy". Licensing Executives Society les Nouveles, 2013

© 2016 www.axonal.com.br

Uso estratégico de patentes e informações patentárias

- Estudos de patenteabilidade e (in)validade
- Estudos de liberdade de comercialização
- Mapeamento de segmentos tecnológicos
- Invenção estratégica
- Patenteamento estratégico
- Monitoramento de concorrentes
- Identificação e caracterização de parceiros
- Etc.

© 2016 www.axonal.com.br

Uso estratégico de patentes e informações patentárias

- Estudos de patenteabilidade e (in)validade
- Estudos
- Mapeamento de segmentos tecnológicos
- Invenção
- Patentea
- Monitoramento de concorrentes
- Identific
- Etc.

TUDO TORNADO ACESSÍVEL AO PÚBLICO

POR **QUALQUER MEIO**

EM **QUALQUER LUGAR**

ANTES DA DATA DE PRIORIDADE, COM ALGUMAS EXCEÇÕES

© 2016 www.axonal.com.br

Uso estratégico de patentes e informações patentárias

- Estudos de patenteabilidade e (in)validade
- Estudos de liberdade de comercialização
- Mapean
- Invenção
- Patentea
- Monitor
- Identific
- Etc.

TODAS AS PATENTES

SOBRE **TODOS** OS COMPONENTES

EM **TODOS** OS TERRITÓRIOS ALVOS

© 2016 www.axonal.com.br

Uso estratégico de patentes e informações patentárias

- Estudos de patenteabilidade e (in)validade
- Estudos de liberdade de comercialização
- Mapeamento de segmentos tecnológicos

O que?

- Invenção
- Patentea
- Monitora
- Identifica
- Etc.

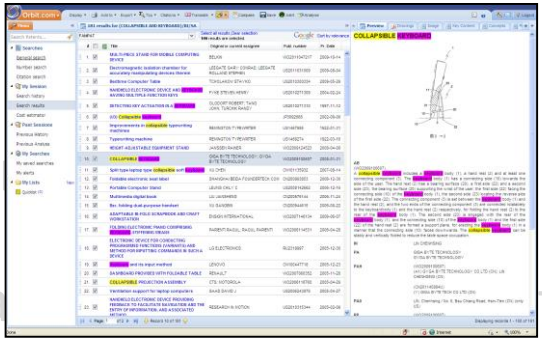

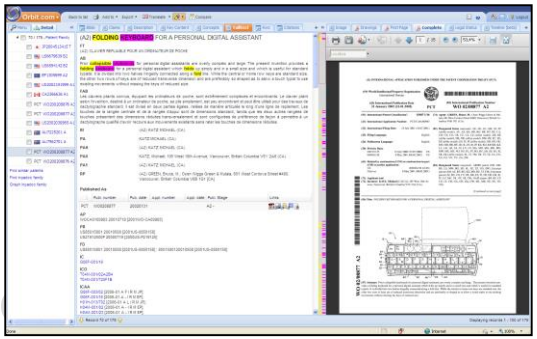

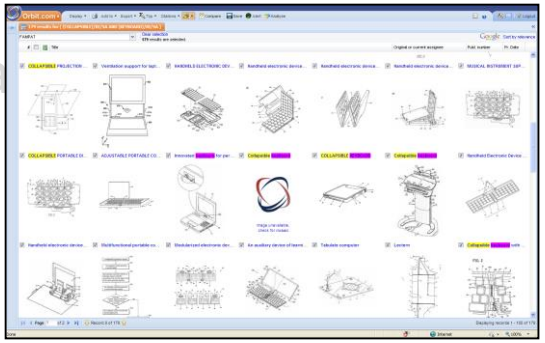

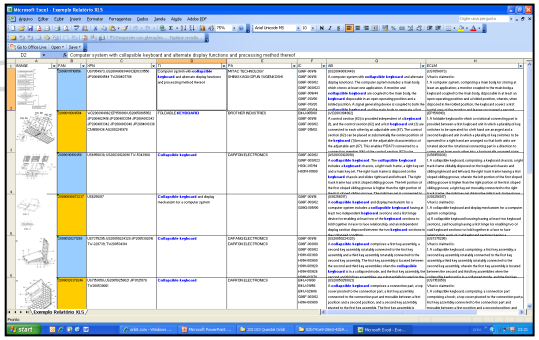

© 2016 www.axonal.com.br

Uso estratégico de patentes e informações patentárias

- Estudos de patenteabilidade e (in)validade
- Estudos de liberdade de comercialização
- Mapeamento de segmentos tecnológicos
- Invenção estratégica

Quem ?

Quando?

Onde?

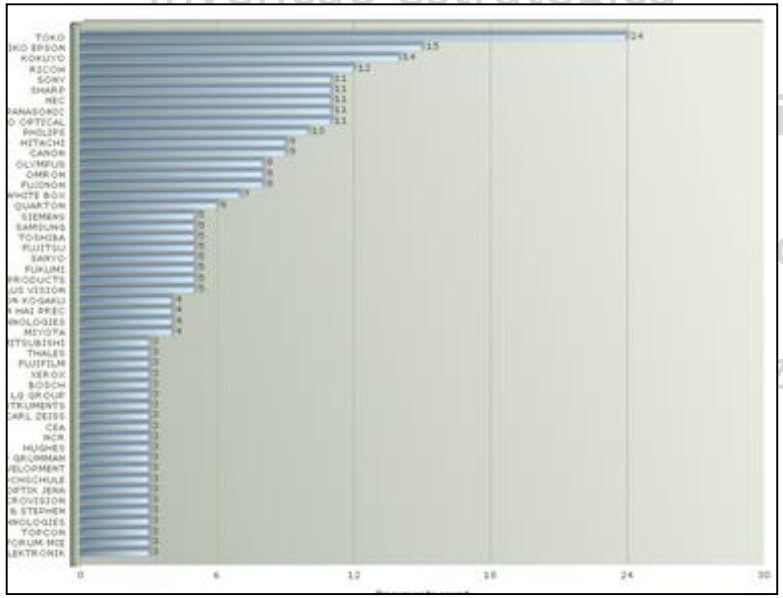

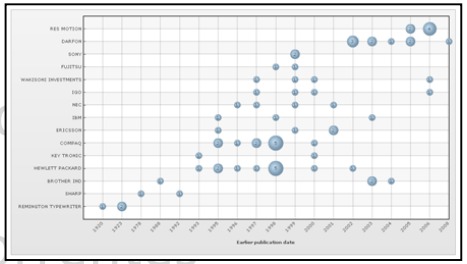

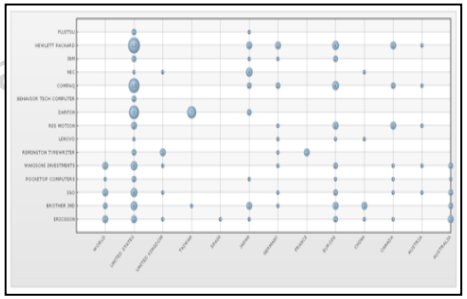

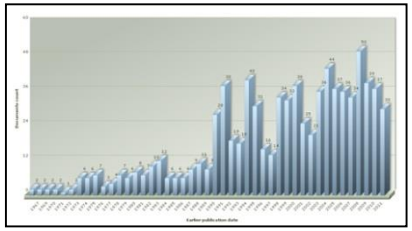

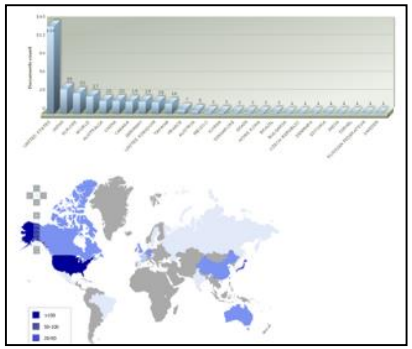

© 2016 www.axonal.com.br

Uso estratégico de patentes e informações patentárias

- Estudos de patenteabilidade e (in)validade
- Estudos de liberdade de comercialização
- Mapeamento de segmentos tecnológicos

Como?

- Invenção
- Patentear
- Monitora
- Identifica
- Etc.

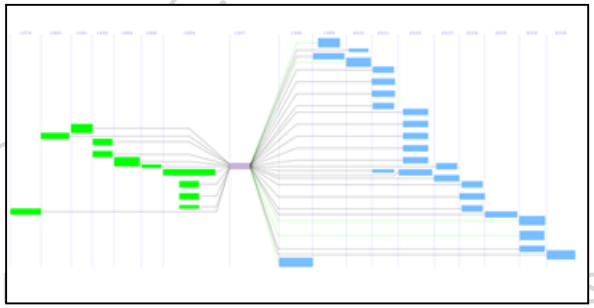

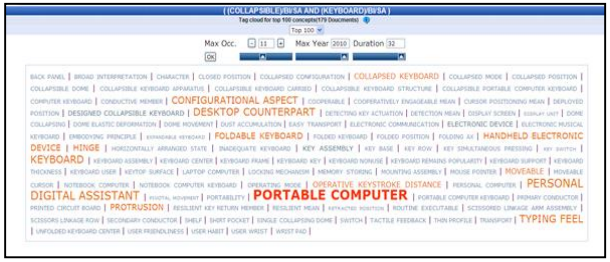

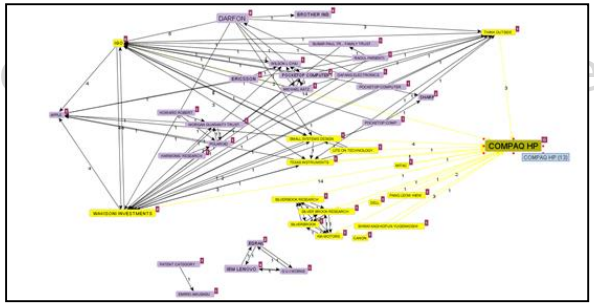

© 2016 www.axonal.com.br

Uso estratégico de patentes e informações patentárias

- Estudos de patenteabilidade e (in)validade
- Estudos de liberdade de comercialização
- Mapeamento de segmentos tecnológicos

Por quê?

E daí ?

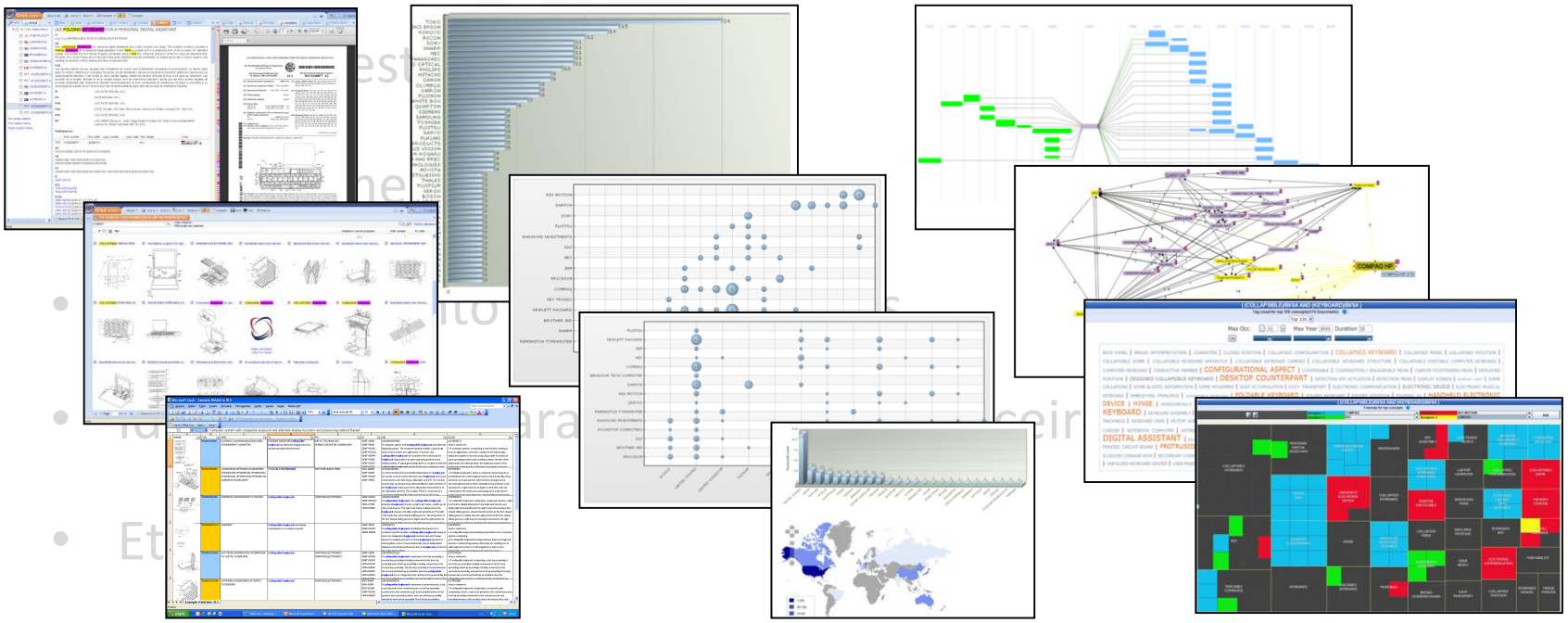

© 2016 www.axonal.com.br

Uso estratégico de patentes e informações patentárias

- Estudos de patenteabilidade e (in)validade
- Estudos de liberdade de comercialização
- Mapeamento de segmentos tecnológicos

Por quê?

E daí ?

Patentes

Literatura Técnica e Científica

Dados de Mercado

Experts

Leis e regulamentações

Acesso a Materiais

Canais de Distribuição

Recursos Financeiros

Etc...

© 2016 www.axonal.com.br

Uso estratégico de patentes e informações patentárias

- Estudos de patenteabilidade e (in)validade
- Estudos de liberdade de
- Mapeamento de segmen
- Invenção estratégica
- Patenteamento estratégico
- Monitoramento de conc
- Identificação e caracteriz
- Etc.

conheça o que já existe,
as barreiras de entrada
e o mercado
antes de sair inventando

anteveja
possíveis cenários futuros
para direcionar esforços

© 2016 www.axonal.com.br

Uso estratégico de patentes e informações patentárias

- Estudos de patenteabilidade e (in)validade
- Estudos de lib
- Mapeamento
- Invenção estr
- Patenteamento estratégico
- Monitoramen
- Identificação
- Etc.

tenha em mente que o “jogo” de patentes é praticado com e contra outros jogadores

acompanhe e se antecipe a movimentos de concorrentes e entrantes

© 2016 www.axonal.com.br

Uso estratégico de patentes e informações patentárias

- Estudos de patenteabilidade e (in)validade
- Estudo de ão
- Mapea me cos
- Invenç
- Patente tég

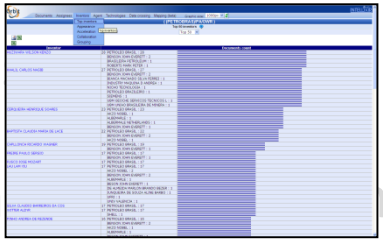
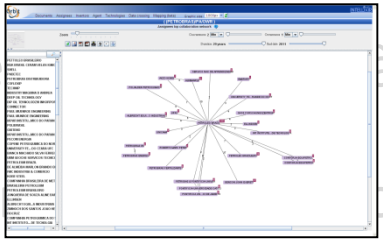
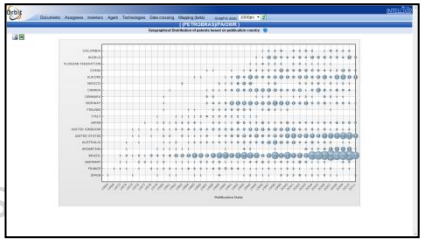
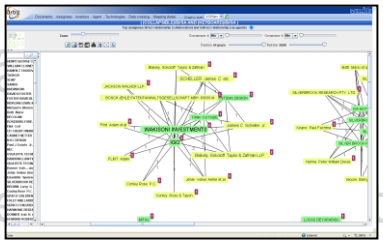
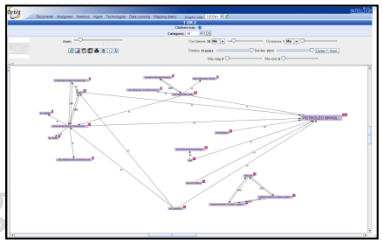
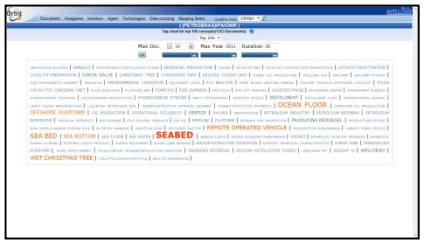

- Monitoramento de concorrentes
- Identificação e caracterização de parceiros
- Etc.

© 2016 www.axonal.com.br

Uso estratégico de patentes e informações patentárias

- Estudos de patenteabilidade e (in)validade
- Estudos de liberdade de comercialização
- os tecnol
- o
- rrentes
- Identificação e caracterização de parceiros
- Etc.

informações
contidas em patentes

como ferramentas de negócios

≠

+

patentes

como ferramentas de negócios

© 2016 www.axonal.com.br

Exemplo de Caso

Orbit.com

Search patents...

Coverage details | Guides & tutorials

Logout

Advanced search

Keywords

Title, Abstract

BUILDING BLOCK? 5D BOTTLE CAP?

E.g.:Telecom+ OR phone

Title, Abstract, Claims, Description, C

Classifications

Names

Numbers, dates & country

Legal status

More fields

Collections

Search | Show cmd. line | Create script | Clear

Orbit.com

Erase all | Save entire strategy | Create a script | Export | Logout

Full Text merged in families (FamPat)

Search Step	Result(s)	Query	Assistant	Source	Action
1	9	(BUILDING BLOCK? 5D BOTTLE CAP?)/TI/AB/IW	Advanced search	FAMPAT	Show results • Modify • Save • Alert • Delete

Combine strategies, E.g.: (1 or 2) not 3, 1 and (phone+)

(BUILDING BLOCK? 5D BOTTLE CAP?)/TI/AB/IW

Search

Orbit.com | Search patents... | Save strategy | Logout

9 results for (BUILDING BLOCK? 5D BOTTLE CAP?)/TI/AB/IW Collection: FAMPAT

Select | Fampat grouping | Display

| RS

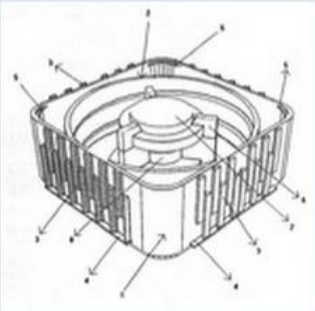

Magnetic bottle cap building...

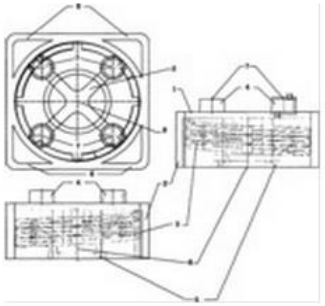

Splicing magnetic bottle cap...

Bottle cap building block

Building system using plasti...

Image unavailable, check for mosaic

Bottle cap building block

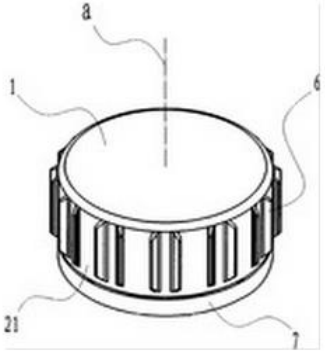

A splicing bottle cap

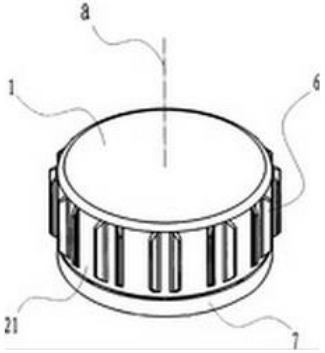

Bottle cap capable of being ...

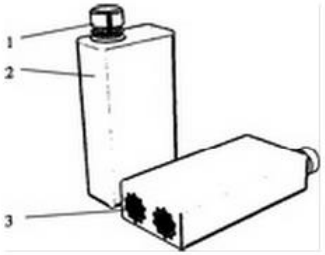

Building block bottle

Page 1 of 1 | Record 1 of 9 | Displaying records 1 - 9 of 9

Orbit.com

Search patents...

Save strategy | Logout

9 results for (BUILDING BLOCK? 5D BOTTLE CAP?)/TI/AB/IW Collection: FAMPAT

Select: 7 | Fampat grouping | Display

RS

More like this
Find similar patents, or rank and refine the results set based on similarity to the selected records

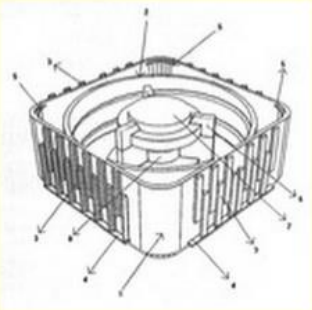

Magnetic bottle cap building...

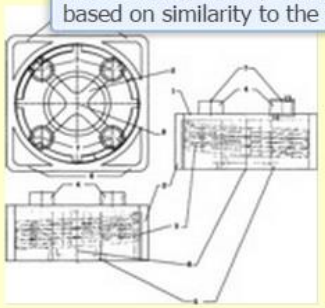

Splicing magnetic bottle cap...

Bottle cap building block

Building system using plasti...

Image unavailable, check for mosaic

Bottle cap building block

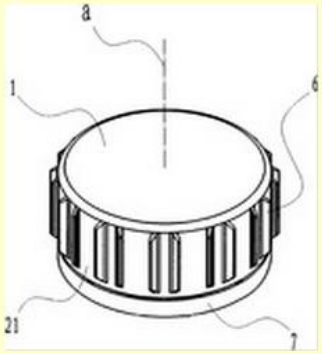

A splicing bottle cap

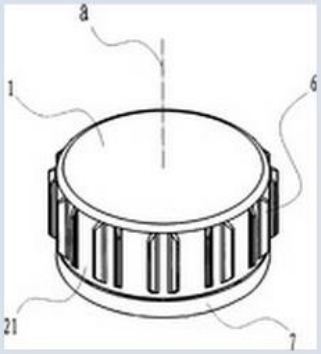

Bottle cap capable of being ...

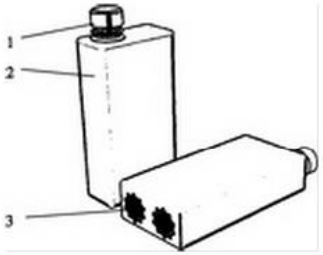

Building block bottle

Page 1 of 1 | Record 7 of 9 | Displaying records 1 - 9 of 9

Orbit.com

Search patents...

Save strategy

Logout

26171 results for Similar patents Collection: FAMPAT

Select

Fampat grouping

Display

RS

Building system using plasti...

Bottle cap building block

Image unavailable, check for mosaic

Bottle cap building block

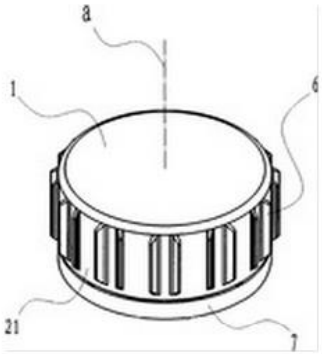

A splicing bottle cap

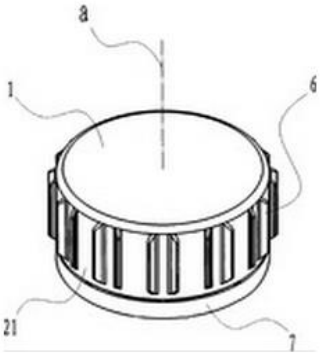

Bottle cap capable of being ...

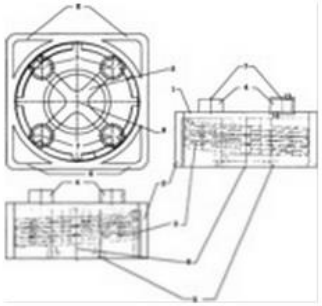

Splicing magnetic bottle cap...

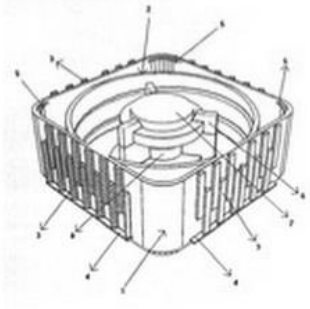

Magnetic bottle cap building...

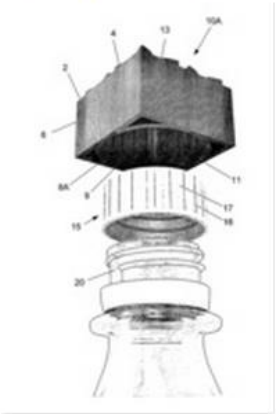

Modular bottle closure

Page 1 of 524

Record 1 of 26171

Displaying records 1 - 50 of 26171

Orbit.com ▾ | Search patents... | Save strategy | Logout

26171 results for Similar patents Collection: FAMPAT

Select ▾ | Fampat grouping ▾ | Display ▾

| RS

Bottle cap capable of being ... | Splicing magnetic bottle cap... | Magnetic bottle cap building... | Modular bottle closure

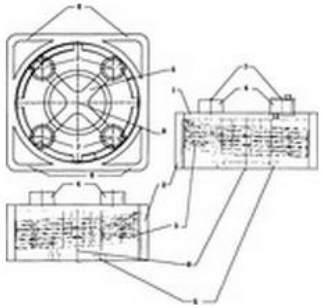

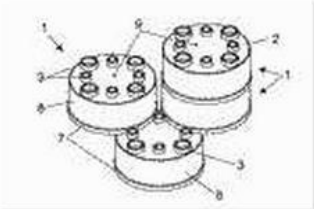

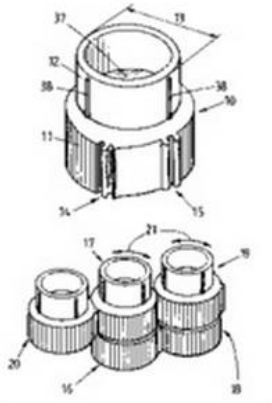

Splicing-inserting magnetic ... | Cap re-usable as interlockin... | Toy utilizing used, discarda... | A body for use in a toy set

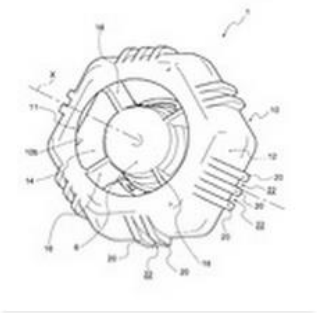

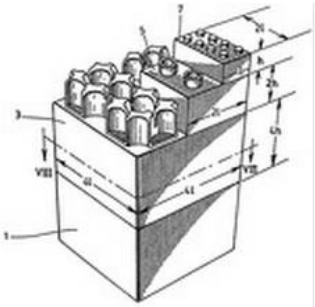

FIG. 1

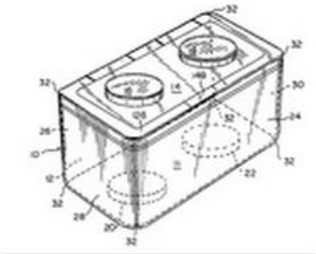

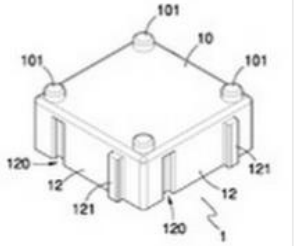

Cap for containers, for exam... | Toy construction assembly | Stackable container for pre... | Bottle caps capable of being...

Page 1 of 524 | Record 1 of 26171 | Displaying records 1 - 50 of 26171

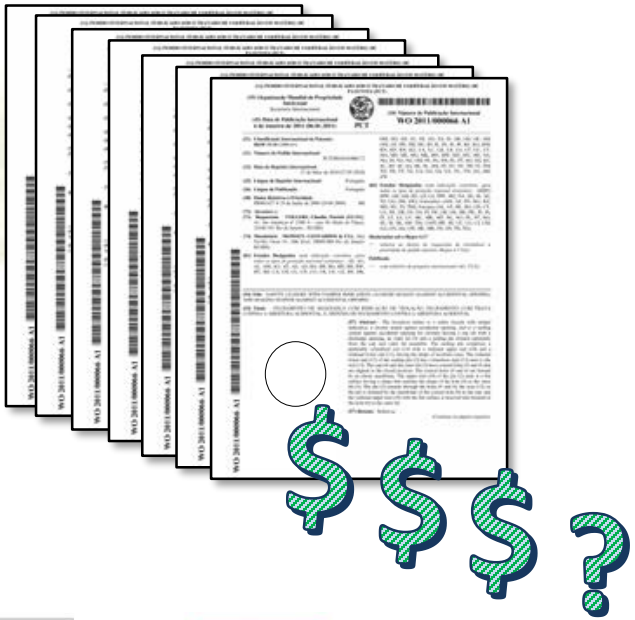

DESIGN MUSEUM

DESIGNS OF THE YEAR 2014

Pelo
London Design Museum

IF Packaging Design Awards 2014

Premiado em duas categorias:
Categoria 01: Bebidas
Categoria 06: Formato da embalagem

23º prêmio embanews 2014

Categoria:
Sustentabilidade
DESTAQUE!

prêmio abre da embalagem brasileira

BDA
BRASILDESIGNAWARD'14

Uso Estratégico de Propriedade Intelectual e Informações Tecnológicas

Foco no Setor Farmacêutico

- Agenda

  - Propriedade Intelectual no contexto farmacêutico, com destaque a patentes

  - Uso estratégico de patentes e informações patentárias

  - Ferramentas e técnicas de busca e análise de informações tecnológicas

  - Fontes, sistemas de busca e análise de informações com foco na área farmacêutica

  - Exemplo de mapeamento de segmento tecnológico

© 2016 www.axonal.com.br

Pesquisa e Análise de Patentes

Ferramentas & Técnicas

- www.intellogist.com

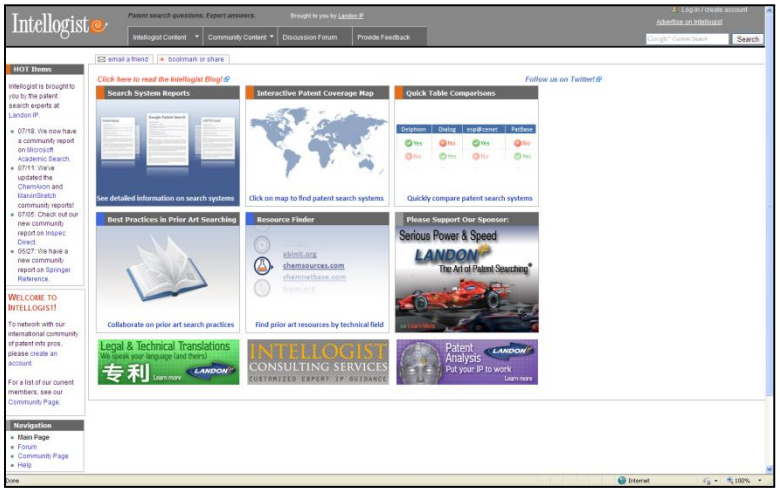

- www.piug.org

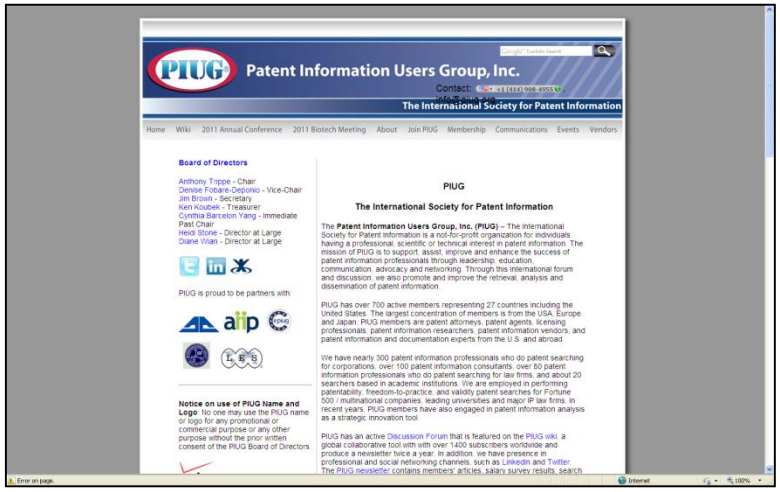

© 2016 www.axonal.com.br

Pesquisa e Análise de Patentes

Ferramentas & Técnicas

- Patent Searching Tools & Techniques

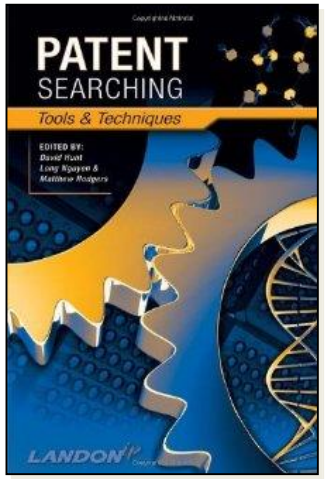

- Patent Searching Made Easy

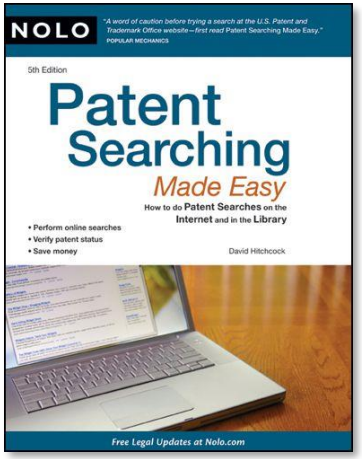

© 2016 www.axonal.com.br

Pesquisa e Análise de Patentes

Ferramentas & Técnicas

- Palavras Chaves
  - Título, Resumo, Relatório Descritivo, Reivindicações
- Campos Bibliográficos / Outros
  - Titular (Assignee), Inventor
  - Números de Prioridade, Depósito, Publicação
  - Datas, Endereços, Representantes,
  - Fórmulas Químicas, Biossequências, etc.
- Classificações de Patentes
  - Internacional, Europeia, Norte Americana, Japonesa
- Citações
  - Referências Citadas, / Citantes
  - Pelo Titular / Pelo(s) Examinador(es)
- Famílias de Patentes
  - Cobertura Geográfica
  - Invenções Relacionadas
- Legal Status
  - Concessão, Oposição, Abandono, Prolongamento, Etc

© 2016 www.axonal.com.br

Pesquisa e Análise de Patentes

Ferramentas & Técnicas

- Palavras Chaves
  - Título, Resumo, Relatório Descritivo, Reivindicações
- Campos Bibliográficos / Outros
  - Titular (Assignee), Inventor
  - Números de Prioridade, Depósito, Publicação
  - Datas, Endereços, Representantes,
  - Fórmulas Químicas, Biossequências, Imagens, etc.
- Classificações de Patentes
  - Internacional, Europeia, Norte Americana, Japonesa
- Citações
  - Referências Citadas, / Citantes
  - Pelo Titular / Pelo(s) Examinador(es)
- Famílias de Patentes
  - Cobertura Geográfica
  - Invenções Relacionadas
- Legal Status
  - Concessão, Oposição, Abandono, Prolongamento, Etc

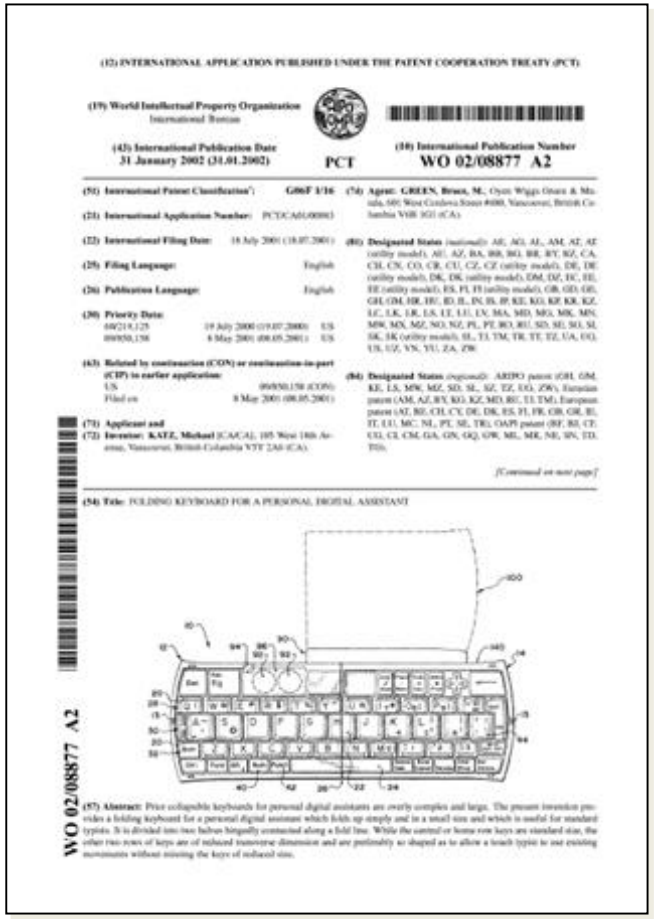

(12) INTERNATIONAL APPLICATION PUBLISHED UNDER THE PATENT COOPERATION TREATY (PCT)

(19) World Intellectual Property Organization
International Bureau

(43) International Publication Date
31 January 2002 (31.01.2002)

PCT

(10) International Publication Number
WO 02/08877 A2

(51) International Patent Classification: G06F 1/16

(21) International Application Number: PCT/CA01/00993

(22) International Filing Date: 18 July 2001 (18.07.2001)

(25) Filing Language: English

(26) Publication Language: English

(30) Priority Data:
60/219,125 19 July 2000 (19.07.2000) US
09/850,158 8 May 2001 (08.05.2001) US

(63) Related by continuation (CON) or continuation-in-part (CIP) to earlier application:
US 09/850,158 (CON)
Filed on 8 May 2001 (08.05.2001)

(71) Applicant and
(72) Inventor: KATZ, Michael [CA/CA]; 105 West 14th Avenue, Vancouver, British Columbia V5Y 2A6 (CA).

(74) Agent: GREEN, Bruce, M.; Oyen Wiggs Green & Mutala, 505 West Cordova Street #600, Vancouver, British Columbia V6B 1G1 (CA).

(81) Designated States (national): AE, AG, AL, AM, AT, AU (utility model), AU, AZ, BA, BB, BG, BR, BY, BZ, CA, CH, CN, CO, CR, CU, CZ, CZ (utility model), DE, DE (utility model), DK, DK (utility model), DM, DZ, EC, EE, EE (utility model), ES, FI, FI (utility model), GB, GD, GE, GH, GM, HR, HU, ID, IL, IN, IS, JP, KE, KG, KP, KR, KZ, LC, LK, LR, LS, LT, LU, LV, MA, MD, MG, MK, MN, MW, MX, MZ, NO, NZ, PL, PT, RO, RU, SD, SE, SG, SI, SK, SK (utility model), SL, TJ, TM, TR, TT, TZ, UA, UG, US, UZ, VN, YU, ZA, ZW

(84) Designated States (regional): ARIPO patent (GH, GM, KE, LS, MW, MZ, SD, SL, SZ, TZ, UG, ZW), European patent (AM, AZ, BY, KG, KZ, MD, RU, TJ, TM), European patent (AT, BE, CH, CY, DE, DK, ES, FI, FR, GB, GR, IE, IT, LU, MC, NL, PT, SE, TR), OAPI patent (BF, BJ, CF, CG, CI, CM, GA, GN, GQ, GW, ML, MR, NE, SN, TD, TG).

[Continued on next page]

(54) Title: FOLDING KEYBOARD FOR A PERSONAL DIGITAL ASSISTANT

(57) Abstract: Prior collapsible keyboards for personal digital assistants are overly complex and large. The present invention provides a folding keyboard for a personal digital assistant which folds up simply and in a small size and which is useful for standard typists. It is divided into two halves hingedly connected along a fold line. While the central or home row keys are standard size, the other two rows of keys are of reduced transverse dimension and are preferably so shaped as to allow a touch typist to use existing movements without missing the keys of reduced size.

WO 02/08877 A2

© 2016 www.axonal.com.br

Pesquisa e Análise de Patentes

Ferramentas & Técnicas

- Palavras Chaves
  - Título, Resumo, Relatório Descritivo, Reivindicações
- Outros campos
  - Titular (Assignee), Inventor
  - Números de Prioridade, Depósito, Publicação
  - Datas, Endereços, Representantes,
  - Fórmulas Químicas, Biossequências, Imagens, etc.
- Classificações de Patentes
  - Internacional, Europeia, Norte Americana, Japonesa
- Citações
  - Referências Citadas, / Citantes
  - Pelo Titular / Pelo(s) Examinador(es)
- Famílias de Patentes
  - Cobertura Geográfica
  - Invenções Relacionadas
- Legal Status
  - Concessão, Oposição, Abandono, Prolongamento, Etc

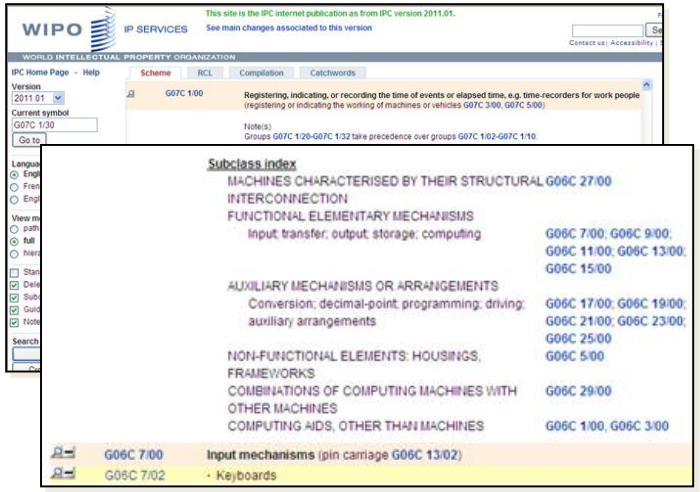

G06C 7/02: Teclados (para computadores)

© 2016 www.axonal.com.br

Pesquisa e Análise de Patentes

Ferramentas & Técnicas

- Palavras Chaves
  - Título, Resumo, Relatório Descritivo, Reivindicações
- Outros campos
  - Titular (Assignee), Inventor
  - Números de Prioridade, Depósito, Publicação
  - Datas, Endereços, Representantes,
  - Fórmulas Químicas, Biossequências, Imagens, etc.
- Classificações de Patentes
  - Internacional, Europeia, Norte Americana, Japonesa
- Citações
  - Referências Citadas, / Citantes
  - Pelo Titular / Pelo(s) Examinador(es)
- Famílias de Patentes
  - Cobertura Geográfica
  - Invenções Relacionadas
- Legal Status
  - Concessão, Oposição, Abandono, Prolongamento, Etc

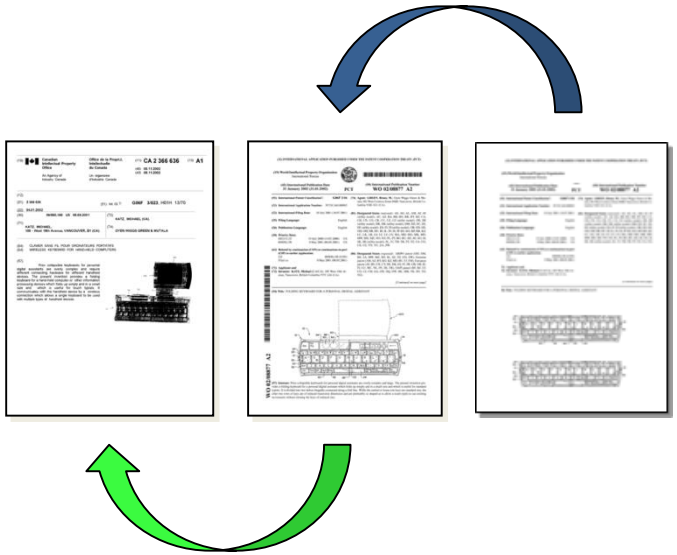

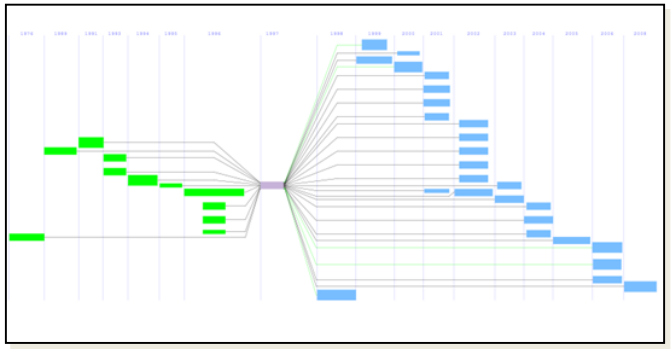

© 2016 www.axonal.com.br

Pesquisa e Análise de Patentes

Ferramentas & Técnicas

- Palavras Chaves
  - Título, Resumo, Relatório Descritivo, Reivindicações
- Outros campos
  - Titular (Assignee), Inventor
  - Números de Prioridade, Depósito, Publicação
  - Datas, Endereços, Representantes,
  - Fórmulas Químicas, Biossequências, Imagens, etc.
- Classificações de Patentes
  - Internacional, Europeia, Norte Americana, Japonesa
- Citações
  - Referências Citadas, / Citantes
  - Pelo Titular / Pelo(s) Examinador(es)
- Famílias de Patentes
  - Cobertura Geográfica
  - Invenções Relacionadas
- Legal Status
  - Concessão, Oposição, Abandono, Prolongamento, Etc

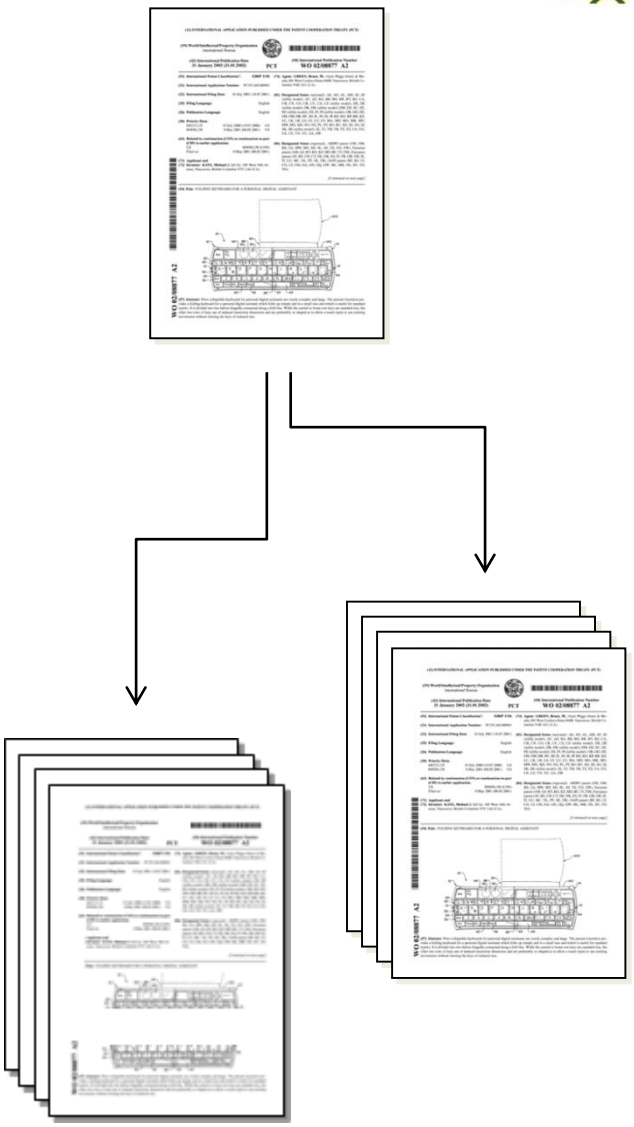

© 2016 www.axonal.com.br

Pesquisa e Análise de Patentes

Ferramentas & Técnicas

- Palavras Chaves
  - Título, Resumo, Relatório Descritivo, Reivindicações
- Outros campos
  - Titular (Assignee), Inventor
  - Números de Prioridade, Depósito, Publicação
  - Datas, Endereços, Representantes,
  - Fórmulas Químicas, Biossequências, Imagens, etc.
- Classificações de Patentes
  - Internacional, Europeia, Norte Americana, Japonesa
- Citações
  - Referências Citadas, / Citantes
  - Pelo Titular / Pelo(s) Examinador(es)
- Famílias de Patentes
  - Cobertura Geográfica
  - Invenções Relacionadas
- Legal Status
  - Concessão, Oposição, Abandono, Prolongamento, Etc

Legal Status		
Dead: US2002030965 A1, US6594142 B2		
20010508	US/API [EXM;POS]	FILING DETAILS US85015801 20010508 [2001US-0850158]
20020314	US/A1 [EXM;POS]	First published patent application US2002030965 A1 20020314 [US20020030965]
20030715	US/B2 [PIF;POS]	Granted patent as second publication US6594142 B2 20030715 [US6594142]
20070904	US/FP-A [NEG;NIF]	EXPIRED DUE TO FAILURE TO PAY MAINTENANCE FEEEFFECTIVE DATE: 20070715

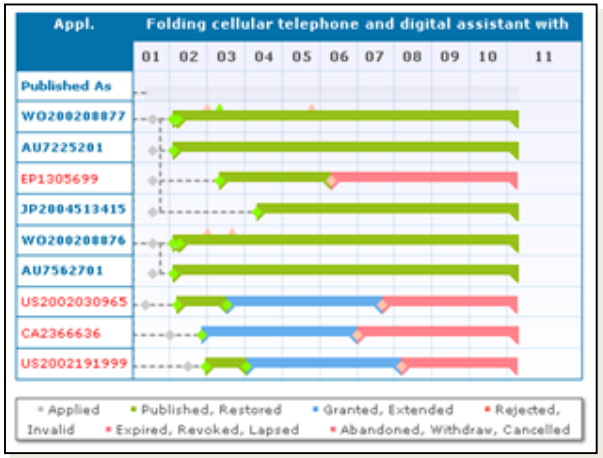

© 2016 www.axonal.com.br

Pesquisa e Análise de Patentes

Exemplo de Roteiro de Busca

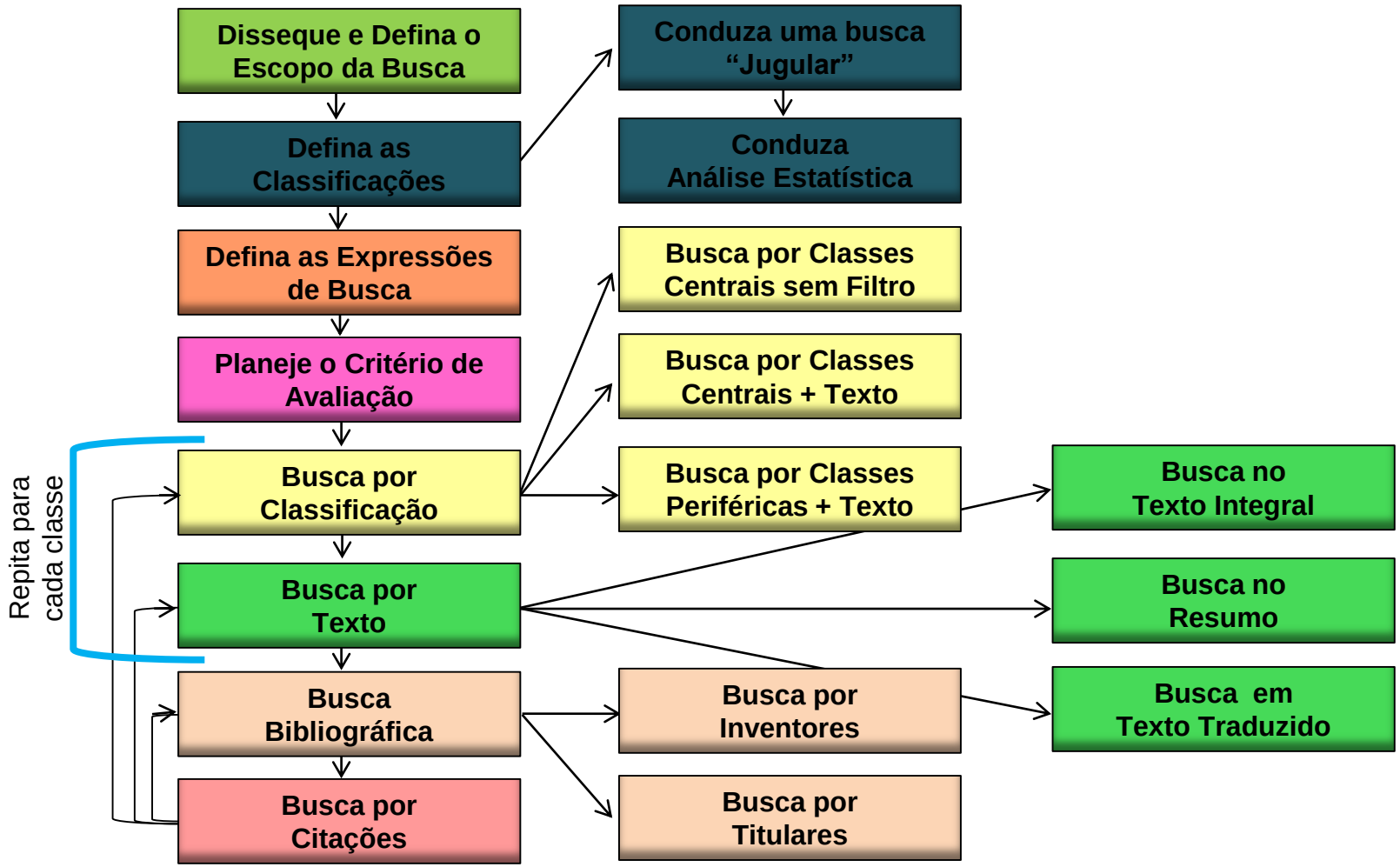

Ref. PRG Art & Science of Patent Searching, Salvador (BA), 2011

© 2016 www.axonal.com.br

Pesquisa e Análise de Patentes

Exemplo de Roteiro de Busca

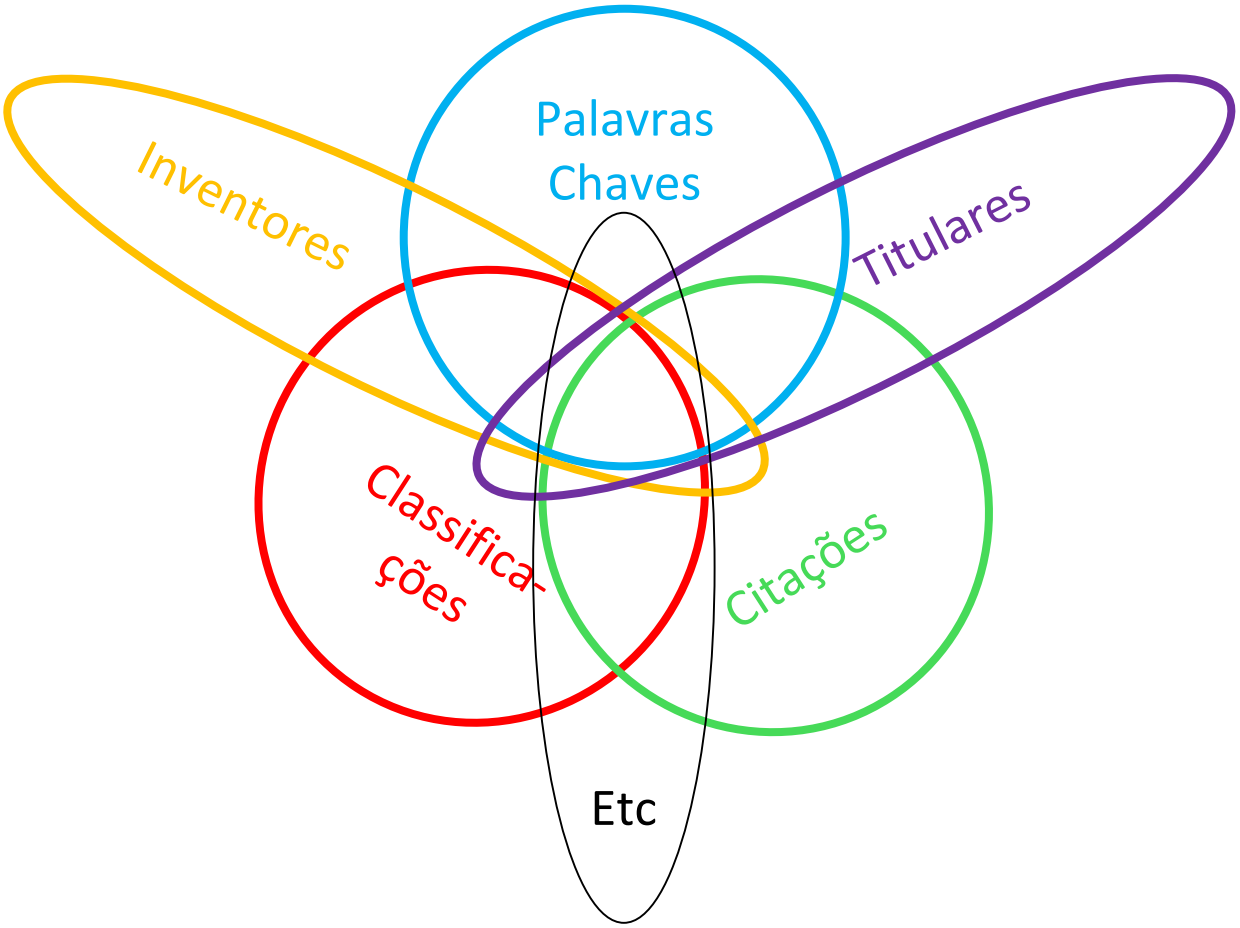

© 2016 www.axonal.com.br

Buscas de Patentes

Operadores Booleanos

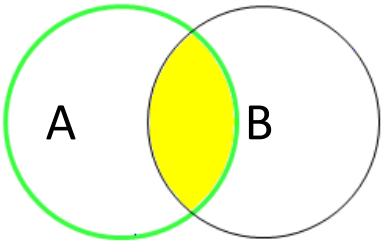

A and B (intersecção)

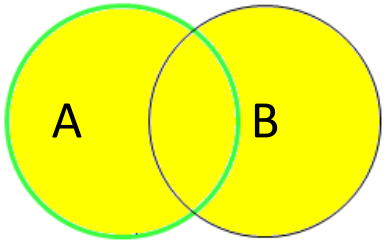

A or B (agrupamento)

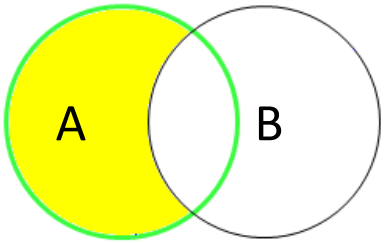

A not B (exclusão*)

* Lembre-se de usar o NOT para encontrar o complemento. Ou seja, os resultados não contidos no conjunto anterior.

© 2016 www.axonal.com.br

Buscas de Patentes

Operadores Booleanos e de Proximidade

AND	ambos os termos de busca presentes (intersecção)	digital **and** television
OR	um ou, opcionalmente, o outro termo de busca presente (soma, grupamento)	television **or** tv
NOT	o primeiro termo de busca presente, mas não o segundo (exclusão)	1 **not** 2
F	termos de busca no mesmo campo	digital **f** (televis+ or tv)
P	termos de busca no mesmo parágrafo	digital **p** (televis+ or tv)
S	termos de busca na mesma sentença	digital **s** (televis+ or tv)
nD	termos presentes, em qualquer ordem, de zero a n termos de distância (n de 1 a 99)	digital **5d** (televis+ or tv)
D	termos contíguos, mas em qualquer ordem	digital **d** (televis+ or tv)
nW	termos presentes, na ordem digitada, de zero a n termos de distância (n de 1 a 99)	digital **5w** (televis+ or tv)
W	termos contíguos, exatamente na ordem digitada	digital **w** (televis+ or tv)

© 2016 www.axonal.com.br

Buscas de Patentes

Exemplos de Campos de Busca

Keywords

Title

- Title
- Title, Abstract
- Title, Abstract, Claims
- Title, Abstract, Key Content
- Title, Abstract, Key Content, Claims
- Claims
- Description
- Independent Claims
- Key Content
- Concepts
- Full Text

Restriction

Limit to the following legal status:

No restriction

- No restriction
- Patent in force
- Opposition
- Licensing
- Term right extended
- Ownership
- Entry into national phase
- Not in force

Names

Assignee (Original or Current)

- Assignee (Original or Current)
- Current Assignee
- Original Assignee

Classifications

IPC

- IPC
- ECLA
- ICO
- US (main)
- US (main & x-ref)
- FI
- F-Terms

Numbers, Dates & Country

Publ. number

- Publ. number
- Appl. number
- Priority number
- Application or Priority number

- Abstracts
- Advantages over prior art drawbacks
- Object of invention
- Citations, all
- Citations, non patent References
- Designated States
- FamPat Family Number
- PCT Publication number
- PCT Application Nbr
- Patent Assignee Country
- Patent Assignee US State
- Inventor Country
- Inventor US State
- Representative Country
- US and FR Filing Details
- Other Publication Dates
- First Date of Pub.Appl.
- First Date of Issued Grant
- Patent Date, last pub.
- First Family's Priority Date
- EPO Dutch Class
- Number of Patents in the FamPat Family
- Number of Priorities in the FamPat Family
- USPTO Examiner or US Representative
- Independant claim number (US)
- Number of claims (US)
- Number of drawings (US)
- Number of figures (US)
- US Case ID

Abstracts

Buscas de Patentes

Exemplos de Expressões de Busca

+prazol? or **PPI** or ((**proton pump** or **hydrogen potassium ATPase** or **H K ATPase**) (w) (**inhib+**))/bi or **73590-58-6**/rn

... (5w) (**pellet+** or **+granul+** or **+spher+**)))/bi

... and **BR**/pn

© 2016 www.axonal.com.br

Uso Estratégico de Propriedade Intelectual e Informações Tecnológicas

Foco no Setor Farmacêutico

- Agenda

  - Propriedade Intelectual no contexto farmacêutico, com destaque a patentes

  - Uso estratégico de patentes e informações patentárias

  - Ferramentas e técnicas de busca e análise de informações tecnológicas

  - Fontes, sistemas de busca e análise de informações com foco na área farmacêutica

  - Exemplo de mapeamento de segmento tecnológico

© 2016 www.axonal.com.br

Fontes de Informações Não Patentárias

- Internet aberta

  ex: Google, Google Acadêmico, ClinicalTrials.gov, ICTRP*, etc.

- Bases de dados indexadas (literatura técnica)

  ex. Caplus*, Medline, Embase*, Biosis, DDFU, Pascal, Kosmet, Napralert*, Scisearch, etc.

- Bases de dados sobre projetos de P&D, licenciamento, notícias, etc.

  Ex. IMS New Product Focus*, IMS Research*, Adis R&D Insight, Biotechgate, MedTRACK, RoyaltySource, Chemical Business Newsbase* etc.

- Livros, Teses, Congressos, Conferências, Revisões

- Bulas e literatura de concorrentes

- Especialistas, Etc.

© 2016 www.axonal.com.br

ICTRP Search Portal

apps.who.int/trialsearch/

Espacenet | Google Tradutor | Office Live | INPI | Orbit | UOL | Webmail | Importado do IE

World Health Organization

International Clinical Trials Registry Platform Search Portal

Home | Advanced Search | Search Tips | UTN | ICTRP website | Contact us

Example: liver cancer OR breast cancer NOT genetic

Search | Search tips

Welcome

- The Clinical Trials Search Portal provides access to a central database containing the trial registration data sets provided by the registries listed on the right. It also provides links to the full original records.
- To facilitate the unique identification of trials, the Search Portal bridges (groups together) multiple records about the same trial.
- Please note: This Search Portal is not a clinical trials registry. How to register a trial
- For mobile users, please use this link http://apps.who.int/trialsearch/ictrpmob.aspx. It can be opened from any smartphone
- It is now possible to export the results of the search into XML. More information

Data Providers

Data sets from data providers are updated every Tuesday evening according to the following schedule:
Every week:

- Australian New Zealand Clinical Trials Registry, last data file imported on **14 January 2013**
- ClinicalTrials.gov, last data file imported on **21 January 2013**
- *New* EU Clinical Trials Register (EU-CTR), last data file imported on **21 January 2013**
- ISRCTN, last data file imported on **21 January 2013**

Every 4 weeks:

- Brazilian Clinical Trials Registry (ReBec), last data file imported on **8 January 2013**
- Chinese Clinical Trial Registry, last data file imported on **7 January 2013**
- Clinical Trials Registry - India, last data file imported on **7 January 2013**
- Clinical Research Information Service - Republic of Korea, last data file imported on **8 January 2013**
- Cuban Public Registry of Clinical Trials, last data file imported on **8 January 2013**
- German Clinical Trials Register, last data file imported on **7 January 2013**
- Iranian Registry of Clinical Trials, last data file imported on **7 January 2013**
- Japan Primary Registries Network, last data file imported on **8 January 2013**

World Health Organization

International Clinical Trials Registry Platform
Search Portal

Home | Advanced Search | List By | Search Tips | UTN | ICTRP website | Contact us

Back to Search

Export results to XML

72 records for 66 trials found for: yellow fever (What is this?)

Show 10 records per page

1 2 3 4 5 6 7

Recruitment status	Main ID	Public Title	Date of Registration
Not recruiting	NCT02231853	Phase I/II Trial of Early Infusion of Multivirus Specific T Cells (MVST) to Prevent Post Transplant Viral Infections	03/09/2014
Authorised	EUCTR2014-001118-24-BE	Evaluation of the immunogenicity and safety of GlaxoSmithKline (GSK) Biologicals' Quadrivalent Influenza Vaccine Influsplit™ Tetra (Fluarix™ Tetra) (GSK2321138A) when co-administered with Pneumovax™ 23 in adults 50 years of age and older.	18/07/2014
Recruiting	NCT02103023	Intradermal Influenza Vaccine in the Young	28/03/2014
Not recruiting	NCT02072174	Clinical Trial of Efficacy of Anaferon for Children® in the Treatment of Influenza and Acute Respiratory Viral Infections in Children	14/02/2014
Recruiting	NCT02013934	Probiotics in Prevention of Common Cold	06/12/2013
Not recruiting	NCT02007356	A Study to Assess Safety and Feasibility of Direct Infusions of Donor-derived Virus-specific T-cells in Recipients of Hematopoietic Stem Cell Transplantation With Post-transplant Viral Infections Using the Cytokine Capture System®	26/11/2013
Not Recruiting	DRKS00005310	The role of monocytes at the infect defense after stem cell transplantation in children and young adults.	23/09/2013
Recruiting	NCT01943305	The Role of Pre-existing Cross-reactive Antibodies in Determining the Efficacy of Vaccination in Humans	03/09/2013
Not Recruiting	CTRI/2013/08/003919	TO EVALUATE EFFICACY AND SAFETY OF DNT -53 IN PATIENTS WITH LOW PLATELET COUNT.	23-08-2013
Not Recruiting	NTR4102	Prevalence, burden, and shedding patterns of respiratory viral infections on the ICU	20/08/2013

1 2 3 4 5 6 7

Disclaimer: Trials posted on this search portal are not endorsed by WHO, but are provided as a service to our users. In no event shall the World Health Organization be liable for any damages arising from the use of the information linked to in this section. None of the information obtained through use of the search portal should in any way be used in clinical care without consulting a physician or licensed health professional. WHO is not responsible for the accuracy, completeness and/or use made of the content displayed for any trial record.

CAplus[SM]/HCAplus/ZCAplus (Chemical Abstracts Plus)

STN® THE CHOICE OF PATENT EXPERTS™

Subject Coverage

- Analytical chemistry
- Applied chemistry
- Biochemistry
- Chemical engineering
- Macromolecular chemistry
- Organic chemistry

File Type

Bibliographic

Features

Thesauri	Classification Code (/CC), Company Name (/CO), Controlled Term (/CT), Cooperative Patent Classification (CPC), European Patent Classification (/ECLA), F-Term (/FTERM), ICO (in-computer-only) Classification (/ICO), International Patent Classifications (/IPC), National Patent Classifications Current (/NCL), National Patent Classifications Issue (/INCL), and Role (/RL)				
Alerts (SDIs)	Daily (Monday-Friday), weekly (default), biweekly				
CAS Registry Number® Identifiers	☑	Page Images	☑	STN® AnaVist™	☑
Keep & Share	☑	SLART	☑	STN Easy®	☑
Learning Database	☑	Structures	☑	STN® Viewer™	☑

Record Content

- Bibliographic information and available abstracts
- Cited references for journals, conference proceedings, and basic patents from the US, EPO, WIPO, and German patent offices added to CAS databases since 1997
- Patent examiner citations from British and French patents (2003-present), Canadian patents (2005-present), Japanese patents (2011-present), as well as nearly 300,000 patent records from 1982-2008
- Citing references
- Legal status information for U.S. patents since 1980
- Patent classifications: IPC, CPC, ECLA, ICO, NCL and FTERM

File Size

More than 40.1 million records (9/2014)

Coverage

1907-present plus more than 180,000 pre-1907 records

Updates

Daily updates (more than 5000 records)

Language

English

Database Producer

Chemical Abstracts Service
2540 Olentangy River Road
P.O. Box 3012
Columbus, Ohio 43210-0012 USA

Sources

Journals: Over 10,000 journals are monitored. All articles, including biographical items, book reviews, editorials, errata, letters to the editor, news announcements, product reviews, meeting abstracts, and miscellaneous items, from nearly 1500 key chemical journals covered since 1994. Bibliographic information and available abstracts for the articles from key journals are added within 1 week of journal receipt. New bibliographic records are added daily.

- Patents
- Conference proceedings
- Electronic-only journals
- Books
- Dissertations
- Reviews
- Technical disclosures
- Web pre-prints
- Meeting abstracts

User Aids

- Training materials are available on the CAS website at www.cas.org
- STNGUIDE
- Online Helps (HELP DIRECTORY lists all help messages available)

Clusters

- 2ANAVIST
- AEROTECH
- AGRICULTURE
- ALLBIB
- AUTHORS
- BIOSCIENCE
- CASLINK
- CASRNS
- CHEMENG
- CHEMISTRY
- CORPSOURCE
- ENGINEERING
- ENVIRONMENT
- FOOD
- FORMULATIONS
- FUELS
- GEOSCIENCE
- GOVREGS
- HEALTH
- MATERIALS
- MEDICINE
- METALS
- PATENTS
- PETROLEUM
- PHARMACOLOGY
- PHYSICS
- POLYMERS
- PV
- SAFETY
- TOXICOLOGY

STN Database Clusters information (PDF).

Related Databases

- CA
- LCA

Pricing

Enter HELP COST at an arrow prompt.

Sample Records

DISPLAY ALL (Journal)

```
ANSWER 1 OF 1  CAPLUS  COPYRIGHT 2013 ACS on STN
AN   2000:138202  CAPLUS  Full-text
DN   132:221385
ED   Entered STN:  01 Mar 2000
TI   Production process for recombinant human angiostatin in Pichia pastoris
AU   Lin, J.; Panigraphy, D.; Trinh, L. B.; Folkman, J.; Shiloach, J.
CS   Department of Surgery, Children's Hospital and Harvard Medical School,
     Boston, MA, 02115, USA
SO   Journal of Industrial Microbiology & Biotechnology (2000), 24(1), 31-35
     CODEN: JIMBFL; ISSN: 1367-5435
DOI  10.1038/sj.jim.2900766
PB   Nature Publishing Group
DT   Journal
LA   English
CC   16-2 (Fermentation and Bioindustrial Chemistry)
AB   A pilot-scale production method of recombinant human angiostatin, a 38-kD fragment
of plasminogen which has been reported to have antiangiogenic activity, has been
successfully established by expressing the protein in the methylotrophic yeast Pichia
pastoris.  The secreted protein inhibited cultured endothelial cell proliferation in
vitro and Lewis lung carcinoma growth in mice.  The fermentation process was carried out
using an online methanol controller, administering methanol to the growing culture and
keeping its concentration under 2 g L-1.  The fermentation lasted 90 h, of which 70 h
were growth on methanol.  During growth on methanol the culture volume increased 64%,
from 7 L to 11.5 L, producing 200 mg angiostatin and 5 kg of biomass.
ST   recombinant human angiostatin fermn Pichia
IT   Fermentation
     Komagataella pastoris
        (production process for recombinant human angiostatin in Pichia pastoris)
IT   86090-08-6P, Angiostatin
     RL: BMF (Bioindustrial manufacture); BIOL (Biological study); PREP
     (Preparation)
        (production process for recombinant human angiostatin in Pichia pastoris)
IT   67-56-1, Methanol, biological studies
     RL: BSU (Biological study, unclassified); BIOL (Biological study)
        (production process for recombinant human angiostatin in Pichia pastoris)
OSC.G   10    THERE ARE 10 CAPLUS RECORDS THAT CITE THIS RECORD (10 CITINGS)
UPOS.G  Date last citing reference entered STN:  27 Feb 2012
OS.G   CAPLUS 2012:181723; 2010:1328434; 2010:548903; 2009:1288101;
              2009:637424; 2007:75901; 2005:702147; 2005:3368; 2003:236743;
              2001:230866
RE.CNT  18    THERE ARE 18 CITED REFERENCES AVAILABLE FOR THIS RECORD
RE   CITED REFERENCES
(1) Brierley, R; Ann NY Acad Sci 1990, V589, P350 CAPLUS
(2) Brierley, R; WO 9003431 International Patent (PCT) Application 1989 CAPLUS
(3) Chen, Y; Proc Biochem 1997, V32, P107
(4) Folkman, J; Proc Natl Acad Sci 1979, V76, P5217 MEDLINE
```

NAPRALERT

STN®
THE CHOICE OF PATENT EXPERTS™

Subject Coverage

Natural product information including pharmacology, biological activity, taxonomic distribution, ethnomedicine, and chemistry of plant, microbial, and animal (including marine) extracts

File Type

Bibliographic

Features

CAS Registry Number® Identifiers	☑	Page Images	☐	STN® AnaVist™	☐
Keep & Share	☐	SLART	☑	STN Easy®	☑
Learning Database	☐	Structures	☐	STN® Viewer™	☐

Record Content

- **NAPRALERT (NAtural PRoducts ALERT)** contains bibliographic and factual data on natural products, including information on the pharmacology, biological activity, taxonomic distribution, chemistry of plant, microbial, and animal (including marine) extracts as well as ethnomedicine use records. In addition, the database contains information on the chemistry and pharmacology of secondary metabolites that are derived from natural sources and that have known structure.
- The records in this file contain bibliographic information and factual data on natural products, including CAS Registry Numbers for many chemical constituents.

File Size

187,821 bibliographic records containing information for over 155,000 natural products and 181,895 organisms (07/2013)

Coverage

- 1650 to 2011
- Approximately 50% of the file is from systematic survey of the literature from 1975 to 2011. The remaining records were obtained by selective retrospective indexing dating back to 1650

Updates

- Occasional updates as information becomes available
- Automatic current-awareness searches (SDIs) are not available

Language

English

Database Producer

Program for Collaborative Research in the
Pharmaceutical Sciences
College of Pharmacy
University of Illinois at Chicago
Chicago, Illinois 60680 USA
Phone: 312-996-2246
Fax: 312-996-7107

Sample Records

DISPLAY IALL

```
ACCESSION NUMBER: 2012:7757  NAPRALERT
DOCUMENT NUMBER:  L33123
TITLE:            MUTAGENICITY OF FOUR NATURAL FLAVORS: CLOVE, CINNAMON, THYME
                  AND ZATARIA MULTIFLORA BOISS
AUTHOR:           SHOEIBI S H; RAHIMIFARD N; PIROUZ B; YALFANI R; PAKZAD S R;
                  MIRAB S S; PIRALI H M
CORPORATE SOURCE: FOOD DRUG LAB RESEARCH CENTER, TEHRAN IRAN
SOURCE:           J MED PLANTS (2009) 8 (5) p. 89-96.
DOCUMENT TYPE:    Paper; (Research paper)
LANGUAGE:         ENGLISH
CHARACTER COUNT:  1680
ORGN Class: DICOT  Family: MYRTACEAE  Genus: SYZYGIUM  Species: AROMATICUM
      Synonym(s): EUGENIA CARYOPHYLLATA
      Organism part: DRIED FLOWER BUDS
      TYPE OF STUDY (STY): IN VITRO.  Classification (CC): MUTAGENIC ACTIVITY
          Extract type: ESSENTIAL OIL
          Dosage Information: AGAR PLATE; CONC USED: 1 MG per ML
          Pathological system: SALMONELLA TYPHIMURIUM
          Qualitative results: ACTIVE
          Comment(s): SEE ARTICLE FOR OTHER TEST RESULTS.  VS.AMES MUTAGENICITY
                      ASSAY.
ORGN Class: DICOT  Family: LAURACEAE  Genus: CINNAMOMUM  Species: ZEYLANICUM
      Organism part: DRIED BARK
      TYPE OF STUDY (STY): IN VITRO.  Classification (CC): MUTAGENIC ACTIVITY
          Extract type: ESSENTIAL OIL
          Dosage Information: AGAR PLATE; CONC USED: 2 MG per ML
          Pathological system: SALMONELLA TYPHIMURIUM
          Qualitative results: INACTIVE
          Comment(s): VS.AMES MUTAGENICITY ASSAY.  SEE ARTICLE FOR OTHER TEST
                      RESULTS.
ORGN Class: DICOT  Family: LAMIACEAE  Genus: THYMUS  Species: VULGARIS
      Organism part: DRIED AERIAL PARTS
      TYPE OF STUDY (STY): IN VITRO.  Classification (CC): MUTAGENIC ACTIVITY
          Extract type: ESSENTIAL OIL
          Dosage Information: AGAR PLATE; CONC USED: 2 MG per ML
          Pathological system: SALMONELLA TYPHIMURIUM
          Qualitative results: INACTIVE
          Comment(s): VS.AMES MUTAGENICITY ASSAY.  SEE ARTICLE FOR OTHER TEST
                      RESULTS.
ORGN Class: DICOT  Family: LAMIACEAE  Genus: ZATARIA  Species: MULTIFLORA
      Organism part: PART NOT SPECIFIED
      TYPE OF STUDY (STY): IN VITRO.  Classification (CC): MUTAGENIC ACTIVITY
          Extract type: ESSENTIAL OIL
          Dosage Information: AGAR PLATE; CONC USED: 2 MG per ML
```

IMS New Product Focus

ProQuest Dialog

Description

IMS New Product Focus tracks worldwide pharmaceutical product launches, records the very first launch of a product in a particular country (New Active Substance) and identifies the indication and price (when available) at the time of the initial launch. Included are product name and composition, manufacturer's name and, where applicable, parent company, therapeutic class code, ingredients and package insert information.

IMS New Product Focus can be used to analyze the success of a new product launch and assess market penetration.

Subject Coverage

IMS New Product Focus covers 50 major world markets. Each record provides the following information for each product:

- composition (including form and dose)
- ingredients and local trade name
- therapeutic class code and indications (when available)
- manufacturing company
- first launch country and date, and subsequent launches
- presentation (pack information)
- launch price data (where available)

Price information includes hospital and retail price, if available. Biotechnology products are also identified, as well as first world launches of new chemical entities.

Date Coverage

1982 to the present

Update Frequency

Monthly

Geographic Coverage

International

Document Types

Newsletters

Publisher

IMS New Product Focus is produced by IMS Health. All questions concerning the database should be directed to:

IMS Health
Customer Services Dept., Global Services
210 Pentonville Road
London, N1 9JY
England

Telephone: +44 0207-393-5888
Fax: +44 0207-393-5346
E-Mail: service@imshealth.com
Web site: www.imshealth.com

In addition to ***Search Options,*** other tools available for searching are ***Limit Options***, ***Browse Fields***, ***"Narrow Results By" Limiters***, and ***Lookup Citation.*** Each is listed separately below. Some data can be searched using more than one tool.

SAMPLE DOCUMENT

TI DUOALMETEC

PUB,PD **IMS New Product Focus** (Apr 28, 2014).

TX,FT Full Text Translate

New Product Focus - Launch Details

CO

Company Information

Company Name:	MERCK SHARP DOHME
Parent Company:	MERCK & CO

Product Information

Trade Name:	DUOALMETEC
Composition:	amlodipine; olmesartan medoxomil
Launch Country:	Mexico
Product Launch Date:	01 May 2013
Therapeutic Classification:	C9D (Angiotensin-II Antagonists)
Indications on Pack:	Hypertension
Drug Status:	Branded; Existing Chemical Entity; Non-Biotechnology Product; Includes Package Pricing

New Product Focus - Pack Details

Pack Information

Number of Ingredients:	2
Number of Packs:	6
Dose Form:	tabs
Composition (Active Ingredients):	tabs a: amlodipine besilate, 5 mg; olmesartan medoxomil base, 20 mg; tabs b: amlodipine besilate, 5 mg; olmesartan medoxomil base, 20 mg; tabs c: amlodipine besilate, 10 mg; olmesartan medoxomil base, 40 mg;

Indexing (details) Cite

NCE	New chemical entity	No
	Numeric indexing	Number of ingredients: 2; Number of packs: 6
TN	Trade name	DUOALMETEC
	Company	DUOALMETEC
TC	Therapeutic class	C9D: Angiotensin-II Antagonists
IND	Indication	Hypertension
GN	Generic name	amlodipine, olmesartan medoxomil
ST	Drug status	Branded
ELDT	Product launch date	2013-05-01
CO	Originator	MERCK SHARP DOHME Parent: MERCK & CO
TI	Title	DUOALMETEC
CLD	Phase	in Mexico.
LA	Language	English
DTYPE	Document type	Product Launch
PUB	Publication title	IMS New Product Focus
PSTYPE	Publication type	Newsletter
NT	Notes	Package/Price: tabs a 14: MXN 408.200 (RPP)(Mexican Peso); Package/Price: tabs b 28: MXN 785.090 (RPP)(Mexican Peso); Package/Price: tabs c 14: MXN 408.200 (RPP)(Mexican Peso); Package/Price: tabs d 28: MXN 785.090 (RPP)(Mexican Peso); Package/Price: tabs e 14: MXN 408.200 (RPP)(Mexican Peso); Package/Price: tabs f 28: MXN 785.090 (RPP)(Mexican Peso)
AV	Availability	Includes package pricing
PD	Publication date	Apr 28, 2014
DSTAT	Document status	New
	Source attribution	IMS New Product Focus, © Publisher specific
AN	Accession number	1494126
	Document URL	http://search.proquest.com/professional/docview/1514784222?accountid=137296
FAV	First available	2014-04-11
UD	Updates	2014-04-11
	Database	IMS New Product Focus (1982 - current)

IMSRESEARCH (IMS LifeCycle, R&D Focus)

STN® THE CHOICE OF PATENT EXPERTS™

Subject Coverage

- All phases of drug development worldwide
- Biotechnological products
- New formulations

File Type

Substance

Features

Thesaurus	None				
Alerts (SDIs)	Weekly or Monthly				
CAS Registry Number® Identifiers	☑	Page Images	☐	STN® AnaVist™	☐
Keep & Share	☑	SLART	☑	STN Easy®	☑
Learning Database	☐	Structures	☐	STN® Viewer™	☐

Record Content

- Substance information
- CAS Registry Number and Chemical Name
- Structures
- Pharmacology
- Development and licensing status worldwide
- Scientific and commercial summaries
- Abstracts of significant scientific papers

File Size

More than 35,260 records (12/13)

Coverage

1977-present

Updates

Weekly

Language

English

Database Producer

IMS HEALTH
210 Pentonville Road
London N1 9JY
United Kingdom
Phone: (+44) 020 3075 5888
Email: info@uk.imshealth.com
Web: http://www.imshealth.com

Sources	Information is gathered from direct reports from companies on their research and development, conferences, patent and journal literature, and attendance at symposia on medical, clinical, and research subjects.
User Aids	• Anatomical Therapeutic Classification Codes (available from the producer) • Online Helps (HELP DIRECTORY lists all help messages available) • STNGUIDE
Clusters	• BIOSCIENCE • CASRNS • IMSBASES • PHARMACOLOGY STN Database Clusters information (PDF).
Pricing	Enter HELP COST at an arrow prompt (=>).

Sample Records

DISPLAY IALL

```
ACCESSION NUMBER:   2010:357  IMSRESEARCH
SOURCE:             R&D Focus, (04 Mar 2010)
DOCUMENT NUMBER:    2500677
STATUS:             NEW DRUG
LABORATORY NAME:    ABT 072
STRUCTURE:
      STRUCTURE DIAGRAM IS NOT AVAILABLE
CLASSIFICATION:     J5B1 Viral Hepatitis Products
INDICATION:         hepatitis C
ACTION:             RNA polymerase inhibitor
ADMINISTRATION:     oral
HIGHEST DEV. PHASE: Phase II (40)
ENTRY DATE:         Entered STN: 8 Mar 2010
                    Last Updated on STN: 6 Apr 2010
LATEST INFORMATION: 04 March 2010 : Abbott and Enanta announced on 2 March
                    2010 the initiation of a phase II trial of ABT 450, ABT 333
                    and ABT 072 in treatment-naive patients with hepatitis C
                    virus (HCV) genotype 1 infection. ABT 450, a protease
                    inhibitor developed by Abbott and Enanta, and ABT 333 and
                    ABT 072, two non-nucleoside polymerase inhibitors developed
                    exclusively by Abbott, will be dosed individually in
                    combination with standard of care (SOC). The study will
                    evaluate the safety, tolerability, pharmacokinetics and
                    antiviral activity of the agents. After a three-day
                    monotherapy period, each antiviral agent will be
                    administered with pegIFN and ribavarin (SOC) for 12 weeks,
                    followed by SOC alone for an additional 36 weeks.

CURRENT DEVELOPMENT STATUS:
 Type  | Status |Stage|   Region    |Indication
=======+========+=====+=============+===========
Highest|Phase II|40   |             |
Phase  |        |     |             |
-------+--------+-----+-------------+-----------
Phase  |Phase II|40   |United States|hepatitis C


COMPANY INFORMATION:
   Type   |Company|Nationality| Corporation
==========+=======+===========+==============
Originator|Abbott |USA        |Abbott (United
          |       |           |States)


COMMERCIAL SUMMARY:
Commercial overview. Overview
Abbott is developing ABT 072, a non-nucleoside polymerase inhibitor, for the
treatment of hepatitis C virus (HCV) infection. A phase II trial of the agent
initiated in February 2010 in patients with HCV genotype 1 infection.
R&D progress. **Hepatitis C**
Phase II, Abbott, USA.---DESIGN:Trial started - Feb 2010. A randomized,
double-blind, parallel assignment phase II trial of ABT 450, ABT 333 and ABT
072 has been initiated in treatment-naive patients with hepatitis C virus (HCV)
genotype 1 infection. The agents will be dosed individually in combination with
standard of care (SOC). The study will evaluate the safety, tolerability,
pharmcokinetics and antiviral activity of the agents. After a three-day
monotherapy period, each antiviral agent will be administered with pegIFN and
ribavarin (SOC) for 12 weeks, followed by SOC alone for an additional 36 weeks.
```

CBNB (Chemical Business NewsBase)

STN®
THE CHOICE OF PATENT EXPERTS™

Subject Coverage

News affecting the chemical industry:

- Company information
- Products and production
- Market information
- Environmental aspects
- Legal aspects and regulations

File Type

Bibliographic

Features

Thesaurus	None				
Alerts (SDIs)	Weekly				
CAS Registry Number® Identifiers	☑	Page Images	☐	STN® AnaVist™	☐
Keep & Share	☑	SLART	☑	STN Easy®	☑
Learning Database	☐	Structures	☐	STN® Viewer™	☐

Record Content

Records contain bibliographic information, controlled indexing for company and country names, chemical names and important concepts, CAS Registry Numbers, and an abstract.

File Size

More than 1.65 million records (7/2014)

Coverage

1984-present

Updates

Daily

Language

English

Database Producer

Elsevier Engineering Information Inc.
1 Castle Point Terrace
Hoboken, New Jersey 07030-5996
USA
Phone: +1 201 216-8500
Fax: +1 201 216-8532
Email: ei@ei.org
Copyright Holder

Database Supplier

FIZ Karlsruhe
STN Europe
P.O. Box 2465
76012 Karlsruhe
Germany
Phone: +49-7247-808-555
Fax: +49-7247-808-259
Email: helpdesk@fiz-karlsruhe.de

Sources

- Newspapers
- Journals
- Company reports
- Stockbroker reports
- Market research reports
- Books
- Press releases
- Trade literature
- Advertisements
- Government and EU publications
- Directories

User Aids

- CBNB User Manual (incl. Chemicals Index) *
- CBNB Core Sources List
http://www.stn-international.de/fileadmin/be_user/STN/pdf/database_details/CBNB_HCSL_issue_15.pdf
- Online Helps (HELP DIRECTORY lists all help messages available)
- STNGUIDE

* available from producer

Clusters

- AGRICULTURE
- ALLBIB
- BUSINESS
- CASRNS
- CHEMENG
- CHEMISTRY
- COMPANIES
- ENVIRONMENT
- FUELS
- GOVREGS
- HEALTH
- MATERIALS
- PETROLEUM
- PHARMACOLOGY
- POLYMERS

STN Database Clusters information (PDF)

Pricing

Enter HELP COST at an arrow prompt.

DISPLAY ALL OF PRESS RELEASE

AN 26(47):64544 CBNB

TI Potash One agrees to friendly takeover by K+S for C$4.50 per share in cash.

SO (22 Nov 2010), (200-899 words)
Availability: K+S AG, Bertha-von-Suttner-Strasse 7, 34131 Kassel, Germany, tel: +49 5619 3010, fax: +49 5619 30117 53, website: www.k-plus-s.com

DT Press Release; (Column)

LA English

PY 2010

AB On 22 Nov 2010, K+S AG and Potash One Inc announced that they have entered into a Support Agreement pursuant to which K+S will make an offer to acquire all of the issued and outstanding common shares of Potash One at a price of C$4.50 per share in cash for total consideration of approximately C$434 M (EUR 311 M). The offer represents a: 24.3% premium to the closing price of Potash One shares on 19 Nov 2010 on the Toronto Stock Exchange; 31.3% premium over the 10-day weighted average trading price of the shares up to and including 19 Nov 2010; and 82.2% premium to Potash One's share price of CAD 2.47 on 16 Aug 2010, the day prior to Potash Corp's rejection of BHP Billiton's unsolicited proposal. The Potash One Board of Directors has unanimously determined that the transaction is fair to Potash One shareholders and is in the best interests of the company and its shareholders. The Board recommends that shareholders tender their common shares to the offer. Potash One's Board has received an opinion from GMP Securities L.P. that the consideration to be received by the Potash One shareholders under the offer is fair from a financial point of view to those shareholders. Potash One holds several potash exploration licenses in the Canadian province of Saskatchewan, including the Legacy Project, an advanced greenfield project to develop a potash solution mine. K+S estimates production capacity of up to 2.7 M tonnes/y of potassium chloride. The realisation of this production capacity would represent an approximately $2.5 bn capital investment into Saskatchewan and create up to 300 highly-skilled jobs. The project headquarters will be located in Saskatchewan, Canada. K+S expects initial production no earlier than 2015.

CC MS-06
Fertilizers

CO Kali und Salz (K+S); Potash One

GT 1112: GERMANY; 2103: CANADA

CT mergers and acquisitions; investment; plant capacity; employment

CN potassium chloride

RN 7447-40-7

SIC 28194 Potassium and Sodium Compounds

Fontes de Informações Patentárias (Gratuitas)

- INPI (https://gru.inpi.gov.br/pePI/servlet/LoginController?action=login)
- USPTO (http://patft.uspto.gov)
- USPTO PAIR (http://portal.uspto.gov/pair/PublicPair)
- Espacenet (http://worldwide.espacenet.com)
- Epoline Register Plus (https://register.epo.org/regviewer)
- Google patents, WIPOI, Etc...
- Intellogist (www.intellogist.com)

© 2016 www.axonal.com.br

Instituto Nacional da
Propriedade Industrial
Ministério do Desenvolvimento, Indústria e Comércio Exterior

Consulta à Base de Dados do INPI

[Ajuda? | Login | Cadastre-se aqui.]

- Marca
- Patente
- Desenho Industrial
- Indicação Geográfica
- Programa de Computador
- Topografia de Circuitos Integrados
- Transferência de Tecnologia
- Informação Tecnológica de Patentes

NOTA:
- Para efeitos legais a Revista Eletrônica da Propriedade Industrial (RPI) é o único canal destinado a publicar os atos, despachos e decisões relacionados às atividades da Autarquia.
- O acervo contido na base de dados está restrito a documentos publicados a partir do ano 2000, cujos dados foram publicados oficialmente na Revista da Propriedade Industrial.

Instituto Nacional da
Propriedade Industrial
Ministério do Desenvolvimento, Indústria e Comércio Exterior

Consulta à Base de Dados do INPI

PESQUISA AVANÇADA

Forneça abaixo as chaves de pesquisa desejadas.Evite o uso de frases ou palavras genéricas.

Números

(21) Nº do Pedido:

Calendário de Patentes expiradas/a expirar

Patente Concedida

(33)/(31) País/Nº da Prioridade:

(86) Nº do Depósito (PCT):

Datas

Classificação

Palavra Chave

Depositante/Titular/Inventor

Nº de Processos por Página: 20

pesquisar » limpar

Depósito de pedido nacional de Patente

Documento Publicado

(21) Nº do Pedido: MU 8702761-5 U2

(22) Data do Depósito: 26/10/2007

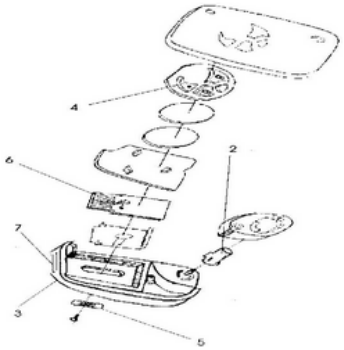

(43) Data da Publicação: 23/06/2009

(47) Data da Concessão: -

(51) Classificação - IntCL: E05B 19/00 ; B60R 25/00

(54) Título: CHAVE CANIVETE COM ESPAÇO RESERVADO PARA ALARME E DISPOSITIVO DE ARMAZENAMENTO DE DADOS

(57) Resumo: CHAVE CANIVETE COM ESPAÇO RESERVADO PARA ALARME E DISPOSITIVO DE ARMAZENAMENTO DE DADOS. Pertencente ao ramo de componentes automotivos, compreendido pelo acréscimo a uma chave tipo canivete (1) uma chave deslizante (5) que permite que um mmi pen drive (6) saia da caixa plástica (3) que reveste a chave e os outros componentes, através de um orifício (7) que permite por fim que o usuário acople a entrada especificada pelo mesmo.

(71) Nome do Depositante: Marcio Zuicker de Camargo Castanho (BR/SP)

(72) Nome do Inventor: Marcio Zuicker de Camargo Castanho

(74) Nome do Procurador: Autoral Patentes e Marcas S/C LTDA.

Petições

Pgo	Protocolo	Data	Img		Serviço	Cliente	Delivery	Data
✓	018080009409	20/02/2008	-		206	Márcio Zuicker de Camargo Castanho		-
✓	018070071114	26/10/2007	-		200	Márcio Zuicker de Camargo Castanho		-

Publicações

RPI	Data RPI	Despacho	Complemento do Despacho
2113	**05/07/2011**	11.1.1	
2098	**22/03/2011**	11.1	
2007	**23/06/2009**	3.1	
1951	**27/05/2008**	2.1	

USPTO Patent Full-Text and Image Database

Home | Quick | Advanced | Pat Num | Help

View Cart

Data current through August 25, 2015..

Query [Help]

Examples:
ttl/(tennis and (racquet or racket))
isd/1/8/2002 and motorcycle
in/newmar-julie

Select Years [Help]

1976 to present [full-text]

Search | Redefinir

Patents from 1790 through 1975 are searchable only by Issue Date, Patent Number, and Current Classification (US, IPC, or CPC).
When searching for specific numbers in the Patent Number field, patent numbers must be seven characters in length, excluding commas, which are optional.

Field Code	Field Name	Field Code	Field Name
PN	Patent Number	IN	Inventor Name
ISD	Issue Date	IC	Inventor City
TTL	Title	IS	Inventor State
ABST	Abstract	ICN	Inventor Country
ACLM	Claim(s)	AANM	Applicant Name
SPEC	Description/Specification	AACI	Applicant City
CCL	Current US Classification	AAST	Applicant State
CPC	Current CPC Classification	AACO	Applicant Country
CPCL	Current CPC Classification Class	AAAT	Applicant Type
ICL	International Classification	LREP	Attorney or Agent
APN	Application Serial Number	AN	Assignee Name
APD	Application Date	AC	Assignee City
APT	Application Type	AS	Assignee State
GOVT	Government Interest	ACN	Assignee Country
FMID	Patent Family ID	EXP	Primary Examiner
PARN	Parent Case Information	EXA	Assistant Examiner
RLAP	Related US App. Data	REF	Referenced By

USPTO Patent Full-Text and Image Database

Home | Quick | Advanced | Pat Num | Help

Next List | Bottom | View Cart

Searching US Patent Collection...

Results of Search in US Patent Collection db for:
TTL/(pocket AND tool): 90 patents.
*Hits **1** through **50** out of **90***

Final 40 Hits

Jump To

Refine Search ttl/(pocket and tool)

	PAT. NO.	Title
1	9,073,192	Pocket driver tool
2	D732,368	Multi-purpose pocket tool
3	D731,270	Pocket field tool bit
4	D705,536	Two pocket retractable tool pouch for attaching to a tool belt or a body harness vertical strap
5	8,647,026	Cutting tool with pocket feature for reducing stress
6	D696,918	Pocket driver tool
7	8,596,933	Cutting tool having pocket bottom with base and inclined surfaces
8	8,528,215	Pocket tool, in particular a pocket knife
9	8,403,141	Tool bag with secure-pocket configuration
10	8,368,318	Pocket tool with a light pointer
11	8,225,696	Method of manufacturing a pocket tool
12	D658,964	Pocket tool with control panel
13	8,091,627	Stress relief in a pocket of a downhole tool string component
14	8,087,181	Valve body seat pocket inspection tool
15	8,029,214	Pocket hole jig tool system
16	D645,722	Multi-function pocket tool

Patent eBusiness

- Electronic Filing
- Patent Application Information (PAIR)
- Patent Ownership
- Fees
- Supplemental Resources & Support

Patent Information

Patent Guidance and General Info
- Codes, Rules & Manuals
- Employee & Office Directories
- Resources & Public Notices

Patent Searches

Patent Official Gazette
- Search Patents & Applications
- Search Biological Sequences
- Copies, Products & Services

Other

Copyrights
Trademarks
Policy & Law
Reports

Patent Application Information Retrieval

Select New Case

Select New Case

* *indicates a required field*

You may search for a specific application or conduct a search related to a customer number.

Search for Application:

Choose type of number:

- ○ Application Number (EXAMPLE: 99999999 or 99/999999)
- ○ Control Number
- ◉ Patent Number
- ○ PCT Number (EXAMPLE: PCT/CCYY/99999 or PCT/CCYYYY/999999)
- ○ Publication Number
- ○ International Design Registration Number (EXAMPLE: DM/999999)

* Enter number: 7,146,667 SEARCH

If you need help:

- *Contact the Patent Electronic Business Center at (866) 217-9197 (toll free) or e-mail EBC@uspto.gov for specific questions about Patent Application Information Retrieval (PAIR).*
- *If you experience technical difficulties or problems with PAIR outside normal Patent Electronic Business Center hours (M-F, 6AM to 12AM ET), please call 1 800-786-9199.*
- *Send general questions about USPTO programs to the USPTO Contact Center (UCC) .*

Patent eBusiness

- Electronic Filing
- Patent Application Information (PAIR)
- Patent Ownership
- Fees
- Supplemental Resources & Support

Patent Information

- Patent Guidance and General Info
- Codes, Rules & Manuals
- Employee & Office Directories
- Resources & Public Notices

Patent Searches

- Patent Official Gazette
- Search Patents & Applications
- Search Biological Sequences
- Copies, Products & Services

Other

- Copyrights
- Trademarks
- Policy & Law
- Reports

Patent Application Information Retrieval

Order Certified Application As Filed | Order Certified File Wrapper | View Order List

10/965,638 POCKET TOOL 0425202

Select New Case | Application Data | Transaction History | Image File Wrapper | Patent Term Adjustments | Continuity Data | Foreign Priority | Fees | Published Documents | Address & Attorney/Agent | Assignments | Display References

Bibliographic Data

Application Number:	10/965,638	Correspondence Address Customer Number:	-
Filing or 371 (c) Date:	10-14-2004	Status:	Patented Case
Application Type:	Utility	Status Date:	11-22-2006
Examiner Name:	THOMAS, DAVID B	Location:	ELECTRONIC
Group Art Unit:	3723	Location Date:	-
Confirmation Number:	8173	Earliest Publication No:	US 2005-0081302 A1
Attorney Docket Number:	0425202	Earliest Publication Date:	04-21-2005
Class / Subclass:	007/118	Patent Number:	7,146,667
First Named Inventor:	Carl Elsener , Ibach, (CH) all Inventors	Issue Date of Patent:	12-12-2006
First Named Applicant:	-	International Registration Number (Hague):	-
Entity Status:	Undiscounted	International Registration Publication Date:	-
AIA (First Inventor to File):	No		

Title of Invention: POCKET TOOL

If you need help:

- *Contact the Patent Electronic Business Center at (866) 217-9197 (toll free) or e-mail EBC@uspto.gov for specific questions about Patent Application Information Retrieval (PAIR).*
- *If you experience technical difficulties or problems with PAIR outside normal Patent Electronic Business Center hours (M-F, 6AM to 12AM ET), please call 1 800-786-9199.*
- *Send general questions about USPTO programs to the USPTO Contact Center (UCC) .*

Patent eBusiness

- Electronic Filing
- Patent Application Information (PAIR)
- Patent Ownership
- Fees
- Supplemental Resources & Support

Patent Information

Patent Guidance and General Info
- Codes, Rules & Manuals
- Employee & Office Directories
- Resources & Public Notices

Patent Searches

Patent Official Gazette
- Search Patents & Applications
- Search Biological Sequences
- Copies, Products & Services

Other

Copyrights
Trademarks
Policy & Law
Reports

Patent Application Information Retrieval

Order Certified Application As Filed | Order Certified File Wrapper | View Order List

10/965,638 **POCKET TOOL** **0425202**

Select New Case | Application Data | Transaction History | Image File Wrapper | Patent Term Adjustments | Continuity Data | Foreign Priority | Fees | Published Documents | Address & Attorney/Agent | Assignments | Display References

This application is officially maintained in electronic form. To View: Click the desired Document Description. To Download and Print: Check the desired document(s) and click Start Download.

Available Documents

Mail Room Date	Document Code	Document Description	Document Category	Page Count	PDF
12-22-2006	IRFND	Processed Request for Refund	PROSECUTION	2	
11-22-2006	ISSUE.NTF	Issue Notification	PROSECUTION	1	
11-02-2006	IFEE	Issue Fee Payment (PTO-85B)	PROSECUTION	2	
08-10-2006	NOA	Notice of Allowance and Fees Due (PTOL-85)	PROSECUTION	3	
08-10-2006	NOA	Notice of Allowance and Fees Due (PTOL-85)	PROSECUTION	3	
08-10-2006	1449	List of References cited by applicant and considered by examiner	PROSECUTION	1	
08-10-2006	IIFW	Issue Information including classification, examiner, name, claim, renumbering, etc.	PROSECUTION	1	
08-10-2006	BIB	Bibliographic Data Sheet	PROSECUTION	1	
08-10-2006	FWCLM	Index of Claims	PROSECUTION	1	
08-10-2006	SRFW	Search information including classification, databases and other search related notes	PROSECUTION	1	
07-25-2006	SRNT	Examiner's search strategy and results	PROSECUTION	2	
06-19-2006	A...	Amendment/Req. Reconsideration-After Non-Final Reject	PROSECUTION	1	
06-19-2006	CLM	Claims	PROSECUTION	20	
06-19-2006	REM	Applicant Arguments/Remarks Made in an Amendment	PROSECUTION	3	
06-19-2006	WFEE	Fee Worksheet (SB06)	PROSECUTION	1	
05-17-2006	NTC.A.NONCPL	Notice to the applicant regarding a non-compliant or non-responsive amendment	PROSECUTION	2	
05-09-2006	A.I.	Informal or Non-Responsive Amendment	PROSECUTION	2	
05-09-2006	CLM.NE	Claim-Amendment Not Entered	PROSECUTION	19	
05-09-2006	SPEC	Specification	PROSECUTION	12	
05-09-2006	REM	Applicant Arguments/Remarks Made in an Amendment	PROSECUTION	13	
05-09-2006	LET.	Miscellaneous Incoming Letter	PROSECUTION	1	
05-09-2006	XT/	Extension of Time	PROSECUTION	3	
05-09-2006	IDS	Information Disclosure Statement (IDS) Form (SB08)	PROSECUTION	2	
05-09-2006	FOR	Foreign Reference	PRIOR ART	17	
05-09-2006	WFEE	Fee Worksheet (SB06)	PROSECUTION	2	
04-14-2006	XT/	Extension of Time	PROSECUTION	2	
01-09-2006	XT/	Extension of Time	PROSECUTION	2	
11-10-2005	CTNF	Non-Final Rejection	PROSECUTION	6	
11-10-2005	892	List of references cited by examiner	PRIOR ART	1	

uspto.GOV

The United States Patent and Trademark Office
an agency of the Department of Commerce

Home Patents Trademarks Other

Patent eBusiness

- Electronic Filing
- Patent Application Information (PAIR)
- Patent Ownership
- Fees
- Supplemental Resources & Support

Patent Information

- Patent Guidance and General Info
- Codes, Rules & Manuals
- Employee & Office Directories
- Resources & Public Notices

Patent Searches

- Patent Official Gazette
- Search Patents & Applications
- Search Biological Sequences
- Copies, Products & Services

Other

- Copyrights
- Trademarks
- Policy & Law
- Reports

Patent Application Information Retr

10/965,638 POCKET

Select New Case | Application Data | Transacti History

This application is officially maintai and click Start Download.

Available Documents

Mail Room Date	Docur
12-22-2006	IRFND
11-22-2006	ISSUE.NTF
11-02-2006	IFEE
08-10-2006	NOA
08-10-2006	NOA
08-10-2006	1449
08-10-2006	IIFW
08-10-2006	BIB
08-10-2006	FWCLM
08-10-2006	SRFW
07-25-2006	SRNT
06-19-2006	A...
06-19-2006	CLM
06-19-2006	REM
06-19-2006	WFEE
05-17-2006	NTC.A.NON
05-09-2006	A.I.
05-09-2006	CLM.NE
05-09-2006	SPEC
05-09-2006	REM
05-09-2006	LET.
05-09-2006	XT/
05-09-2006	IDS
05-09-2006	FOR
05-09-2006	WFEE
04-14-2006	XT/
01-09-2006	XT/
11-10-2005	CTNF
11-10-2005	892

PDF viewer - Google Chrome

portal.uspto.gov/pair/view/BrowsePdfServlet?objectId=EFUB372UPP2GUI2&lar

File: 10965638 Page No.: 3 of 6 pages NonFinal Rejection

1. The disclosure is objected to because of the following informalities: The specification is objected to because, under the heading of Summary of the Invention, the applicant is describing the device based upon reference to the claimed subject matter, e.g. on page 4, the specification states, "The problem of the invention is resolved by the features defined in the characterizing clause of claim 1". This is not only objectionable, but considering that the content, scope and/or numbering of the claims may change during the prosecution, a description of the device based upon the claims, at the close of prosecution, may be different from that originally filed.

Appropriate correction is required.

Claim Rejections - 35 USC § 102

2. The following is a quotation of the appropriate paragraphs of 35 U.S.C. 102 that form the basis for the rejections under this section made in this Office action:

> A person shall be entitled to a patent unless –
>
> (e) the invention was described in (1) an application for patent, published under section 122(b), by another filed in the United States before the invention by the applicant for patent or (2) a patent granted on an application for patent by another filed in the United States before the invention by the applicant for patent, except that an international application filed under the treaty defined in section 351(a) shall have the effects for purposes of this subsection of an application filed in the United States only if the international application designated the United States and was published under Article 21(2) of such treaty in the English language.

3. Claims 1, 3, 5, 11-16, 18, 38, 40, and 41 are rejected under 35 U.S.C. 102(e) as being clearly anticipated by Yu (US 2004/0080989 A1).

4. Claim 116 is rejected under 35 U.S.C. 102(e) as being anticipated by Rivera (6,675,419).

Smart search
Quick search
Advanced search
Number search
Classification search

Advanced search

Select the collection you want to search in

Worldwide - collection of published applications from 90+ countries

Enter your search terms - CTRL-ENTER expands the field you are in

Enter keywords in English

Title: plastic and bicycle

Title or abstract: hair

Enter numbers with or without country code

Publication number: WO2008014520

EP0957704

Application number: DE19971031696

Priority number: WO1995US15925

Enter one or more dates or date ranges

Publication date: yyyymmdd

Enter name of one or more persons/organisations

Applicant(s): Institut Pasteur

Inventor(s): Smith

Enter one or more classification symbols

Euro Classification (ECLA): F03G7/10

International Patent Classification (IPC): H03M1/12

Clear Search

Quick help

- How many search terms can I enter per field?
- How do I enter words from the title or abstract?
- How do I enter words from the description or claims?
- Can I use truncation/wildcards?
- How do I enter publication, application, priority and NPL reference numbers?
- What is the difference between the IPC and the ECLA?
- What formats can I use for the publication date?
- How do I enter a date range for a publication date search?

Related links

Europäisches Patentamt
European Patent Office
Office européen des brevets

Espacenet
Patent search

Deutsch English Français
Contact
Change country

Links diversos para citações, processos integrais, publicações PDF, legal status, famílias de patentes, etc.

About Espacenet Other EPO online services

Search | Result list | My patents list (0) | Quer... | Settings

Refine search → Results → EP0957704 (A2)

EP0957704 (A2)
- **Bibliographic data**
- Description
- Claims
- Mosaics
- Original document
- Cited documents
- Citing documents
- INPADOC legal status
- INPADOC patent family

Quick help

- What does A1, A2, A3 and B stand for after a European publication number?
- What happens if I click on "In my patents list"?
- What happens if I click on the "EP Register" button?
- Why are some sidebar options deactivated for certain documents?
- How can I bookmark this page?
- Why does a list of documents with the heading "Also published as" sometimes appear, and what are these documents?
- Why do I sometimes find the abstract of a corresponding document?
- What happens if I click on the red "patent translate" button?

Bibliographic data: EP0957704 (A2) — 1999-11-24

In my patents list | EP Register | Report data error | Print

PLATE-SHAPED HOLDER HOUSING FOR DAILY USE AND/OR CONSUMER ARTICLES

Page bookmark	EP0957704 (A2) - PLATE-SHAPED HOLDER HOUSING FOR DAILY USE AND/OR CONSUMER ARTICLES
Inventor(s):	PAINSITH HERMANN [AT] +
Applicant(s):	VICTORINOX AG [CH]; PAINSITH HERMANN [AT] +
Classification:	- international: *A45C11/00; A45D29/20; B29C65/02; C12N15/53; A45C11/18; A45C11/32;* (IPC1-7): A45C11/00; A45D29/20
	- Euro: A45C11/00; A45D29/20
Application number:	EP19960939748 19961202
Priority number(s):	WO1996AT00238 19961202; AT19950001961 19951130
Also published as:	EP0957704 (B1) EP0957704 (B2) WO9719856 (A2) WO9719856 (A3) US2001047946 (A1) → more

Abstract not available for EP0957704 (A2)
Abstract of corresponding document: WO9719856 (A2)

Translate this text into
Danish patenttranslate powered by EPO and Google

The invention concerns a plate-shaped metal or plastics housing (1) with at least one internal chamber (8) for holding at least one object. The chamber (8) is delimited by a base plate (6) and at least at given points by a cover plate (7) of the housing (1), the cover plate (7) being parallel to the base plate (6). The housing (1) comprises a plurality of chambers (8) which are disposed adjacent one another in a plane extending parallel to the base plate (6) and/or cover plate (7) and are at least partially separate from one another. The chambers (8) are designed to hold objects such as daily use (9) and/or consumer articles and are accessible from the exterior via openings (23) which are disposed in at least one of the transverse side surfaces (5) and/or longitudinal side surfaces (4) which preferably extend at right-angles to the base plate (6) and/or cover plate (7).

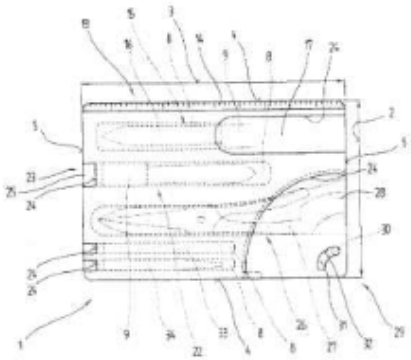

Europäisches Patentamt
European Patent Office
Office européen des brevets

Espacenet
Patent search

English Français
Contact
Change country

About Espacenet Other EPO online services

Search | Result list | My patents list (0) | Query history

Acesso a publicações integrais de diversos países, incluindo publicações de pedidos BR

EP0957704 (B2)
- Bibliographic data
- Description
- Claims
- Mosaics
- **Original document**
- Cited documents
- Citing documents
- INPADOC legal status
- INPADOC patent family

Quick help
- What happens if I click on "In my patents list"?
- What happens if I click on the "EP Register" button?
- How can I maximise the page view?
- How can I download documents?

Original document: EP0957704 (B2) — 2006-07-05

In my patents list | EP Register | Report data error | Print

PLATE-SHAPED HOLDER HOUSING FOR DAILY USE AND/OR CONSUMER ARTICLES

Page 1/54 Bibliography | Maximise | Download

(19) Europäisches Patentamt
European Patent Office
Office européen des brevets

(11) **EP 0 957 704 B2**

(12) **NEUE EUROPÄISCHE PATENTSCHRIFT**

(45) Veröffentlichungstag und Bekanntmachung des Hinweises auf die Entscheidung über den Einspruch: **05.07.2006 Patentblatt 2006/27**

(45) Hinweis auf die Patenterteilung: **08.10.2003 Patentblatt 2003/41**

(21) Anmeldenummer: **96939748.8**

(22) Anmeldetag: **02.12.1996**

(51) Int Cl.: *A45C 11/00* (2006.01) *A45D 29/20* (2006.01)

(86) Internationale Anmeldenummer: **PCT/AT1996/000238**

(87) Internationale Veröffentlichungsnummer: **WO 1997/019856 (05.06.1997 Gazette 1997/24)**

(54) **PLATTENFÖRMIGES AUFNAHMEGEHÄUSE FÜR GEBRAUCHS- UND/ODER VERBRAUCHSGEGENSTÄNDE**

PLATE-SHAPED HOLDER HOUSING FOR DAILY USE AND/OR CONSUMER ARTICLES

ETUI PLAT POUR OBJETS D'UTILISATION COURANTE OU DE CONSOMMATION

(84) Benannte Vertragsstaaten: **AT CH DE ES FR GB IT LI PT**

(30) Priorität: **30.11.1995 AT 196195**

(43) Veröffentlichungstag der Anmeldung: **24.11.1999 Patentblatt 1999/47**

(60) Teilanmeldung: **02028246.3 / 1 293 144**

(73) Patentinhaber:
- **VICTORINOX AG**

(72) Erfinder: **PAINSITH, Hermann**
A-9020 Klagenfurt (AT)

(74) Vertreter: **Secklehner, Günter**
Rechtsanwalt,
Pyhrnstrasse 1
8940 Liezen (AT)

(56) Entgegenhaltungen:

WO-A-93/22948	WO-A-94/29083
DE-A- 3 843 303	DE-C- 2 416 752
DE-C- 3 827 536	DE-U- 9 316 522
FR-A- 739 682	FR-A- 2 656 779

Europäisches Patentamt
European Patent Office
Office européen des brevets

Espacenet
Patent search

Deutsch English Français
Contact
Change country

About Espacenet Other EPO online services

Search | Result list | My patents list (0) | Query history | Settings

Informações resumidas sobre andamento processual em diversos países

Refine search → Results → EP0957704 (A2)

- EP0957704 (A2)
- Bibliographic data
- Description
- Claims
- Mosaics
- Original document
- Cited documents
- Citing documents
- **INPADOC legal status**
- INPADOC patent family

Quick help

- What happens if I click on "In my patents list"?
- What happens if I click on the "EP Register" button?
- What does "legal status" mean?
- Why is the legal status not always available?
- How might this information be useful to me?
- How reliable is this data?
- What are legal status (PRS) codes?

INPADOC legal status: EP0957704 (A2) — 1999-11-24

In my patents list | EP Register | Report data error | Print

PLATE-SHAPED HOLDER HOUSING FOR DAILY USE AND/OR CONSUMER ARTICLES

The EPO does not accept any responsibility for the accuracy of data and information originating from other authorities than the EPO; in particular, the EPO does not guarantee that they are complete, up-to-date or fit for specific purposes.

Legal status of EP0957704 (A2) 1999-11-24; EP0957704 (B1) 2003-10-08; EP0957704 (B2) 2006-07-05:

EP	**F**	**96939748 A**	(Patent of invention)
	PRS Date :	1999/11/24	
	PRS Code :	AK	
	Code Expl.:	+ DESIGNATED CONTRACTING STATES:	
	KD OF CORRESP. PAT. :	A2	
	DESIGNATED COUNTR. :	AT CH DE ES FR GB IT LI PT	
	PRS Date :	1999/11/24	
	PRS Code :	17P	
	Code Expl.:	+ REQUEST FOR EXAMINATION FILED	
	EFFECTIVE DATE :	19980828	
	PRS Date :	2001/10/04	
	PRS Code :	17Q	
	Code Expl.:	+ FIRST EXAMINATION REPORT	
	EFFECTIVE DATE :	20010816	
	PRS Date :	2003/10/08	
	PRS Code :	AK	
	Code Expl.:	+ DESIGNATED CONTRACTING STATES:	
	KD OF CORRESP. PAT. :	B1	
	DESIGNATED COUNTR. :	AT CH DE ES FR GB IT LI PT	
	PRS Date :	2003/10/08	

KD OF CORRESP. PAT. :	T3
PRS Date :	2004/07/23
PRS Code :	ET
Code Expl.:	+ FR: TRANSLATION FILED
PRS Date :	2004/09/01
PRS Code :	26
Code Expl.:	- OPPOSITION FILED
OPPONENT NAME :	VEREINIGTE STAHLWARENFABRIKEN GEBR. RICHARTZ + SOE
EFFECTIVE DATE :	20040708
PRS Date :	2006/07/05
PRS Code :	27A
Code Expl.:	MAINTAINED AS AMENDED
EFFECTIVE DATE :	20060705
PRS Date :	2006/07/05
PRS Code :	AK
Code Expl.:	+ DESIGNATED CONTRACTING STATES:
KD OF CORRESP. PAT. :	B2
DESIGNATED COUNTR. :	AT CH DE ES FR GB IT LI PT
PRS Date :	2006/07/31
PRS Code :	REG CH AEN
Code Expl.:	MODIFICATION OF THE SCOPE OF THE PATENT
FURTHER INFORMATION :	AUFRECHTERHALTUNG DES PATENTES IN GEAENDERTER FORM
PRS Date :	2006/11/01
PRS Code :	GBTA
Code Expl.:	+ GB: TRANSLATION OF AMENDED EP PATENT FILED (GB SECTION 77(6)(B)/1977)
PRS Date :	2007/02/16
PRS Code :	ET3
Code Expl.:	+ FR: TRANSLATION FILED ** DECISION CONCERNING OPPOSITION
PRS Date :	2007/03/16
PRS Code :	REG ES DC2A
Code Expl.:	PATENT MODIFIED
KD OF CORRESP. PAT. :	T5

Europäisches Patentamt
European Patent Office
Office européen des brevets

European Patent Register

Deutsch English Français
Contact

Histórico e acesso integral a todas as comunicações entre o EPO e os titulares e, eventualmente, Oponentes

About European Patent Register Other EPO online services Login

Smart search | Quick search | Advanced search | Help

EP0957704
- About this file
- Legal status
- Event history
- Citations
- Patent family
- All documents

About this file: EP0957704

Refine search | ST36 | Show history | Espacenet | Submit observations | Report error | Print

EP0957704 - PLATE-SHAPED HOLDER HOUSING FOR DAILY USE AND/OR CONSUMER ARTICLES [Right-click to bookmark this link]

Status	Patent maintained as amended *Database last updated on 23.11.2012*		
Most recent event i	04.01.2008	Lapse of the patent in a contracting state	published on 06.02.2008 [2008/06]
Applicant(s)	For all designated states VICTORINOX AG Schmiedgasse 57 6438 Ibach / CH For all designated states Painsith, Hermann Wulfengasse 6 9020 Klagenfurt / AT [1999/47]		
Inventor(s)	01 / PAINSITH, Hermann Wulfengasse 6 A-9020 Klagenfurt / AT [1999/47]		
Representative(s)	Secklehner, Günter Rechtsanwalt, Pyhrnstrasse 1 8940 Liezen / AT [N/P]		
Application number, filing date	96939748.8 [1999/47] WO1996AT00238	02.12.1996	
Priority number, date	AT19950001961 [1999/47]	30.11.1995	Original published format: TA 196195
Filing language	DE		
Procedural language	DE		
Publication	**Type :**	A2 Application without search report	
	No. :	WO9719856	
	Date :	05.06.1997	

Quick help
- What happens if I click on the "XML" or "ST36" buttons?
- What kind of information can be found if I click on the "Show history" button?
- What kind of information can be found under "Status"?
- What do the digits in square brackets refer to?
- What does N/P stand for?
- Why are the publication dates of the European and international applications identical ?
- What does the letter in square brackets stand for in the "Documents cited" part?
- Is it possible to navigate in the result list?

Maintenance news +

News flashes +

Related links +

Europäisches Patentamt
European Patent Office
Office européen des brevets

European Patent Register

Deutsch English Français
Contact

Histórico e acesso integral a todas as comunicações entre o EPO e os titulares e, eventualmente, Oponentes

About European Patent Register Other EPO online services Login

Smart search | Quick search | Advanced search | Help

EP0957704
- About this file
- Legal status
- Event history
- Citations
- Patent family
- **All documents**

Quick help
- Is it possible to download one or more of the documents?
- Is it possible to print a list of all the documents?
- Can I sort the list of documents?
- Is it possible to open a the document?
- Can I open multiple documents in separate windows?
- Is it possible to print documents?

Maintenance news

News flashes

Related links

All documents: EP0957704

Refine search | Select documents | Espacenet | Submit observations | Report error | Print

All documents by | Search

Date	Document type	Procedure	Number of pages
17.07.2007	Termination of the opposition proceedings with maintenance of patent	Opposition	2
08.06.2006	Decision to maintain the European patent in amended form	Opposition	1
08.06.2006	Decision to maintain the European patent in amended form	Opposition	1
23.05.2006	English translation of the claims	Opposition	4
23.05.2006	French translation of claims	Opposition	5
23.05.2006	Letter regarding the opposition procedure (no time limit)	Opposition	2
11.04.2006	Communication of bibliographic data	Opposition	1
11.04.2006	Communication to opponent concerning maintenance	Opposition	2
11.04.2006	Communication with request to pay printing fees and file translations	Opposition	2
07.04.2006	Maintenance of the patent with the documents specified in the final decision	Opposition	1
07.01.2006	Acknowledgement of a document	Opposition	1
29.12.2005	Advice of delivery	Opposition	1
23.12.2005	Druckexemplar	Opposition	56
23.12.2005	Grounds for the decision (Annex) - opposition	Opposition	8
23.12.2005	Interlocutory decision in opposition proceedings	Opposition	2
23.12.2005	Internal form - Opposition/addressees	Opposition	1
10.12.2005	Description	Opposition	7
10.12.2005	Description	Opposition	7
10.12.2005	Reply to an examination report in opposition proceedings	Opposition	2
17.11.2005	Annex to the communication - opposition	Opposition	1

Europäisches Patentamt
European Patent Office
Office européen des brevets

Espacenet
Patent search

utsch English Français
Contact
Change country

About Espacenet Other EPO online services

Search | Result list | My patents list (0) | Query history | Settings

Refine search → Results → EP0957704 (A2) → Family page 1

Pesquisa a documentos "correspondentes" e outros membros de família de patente "expandida" do INPADOC

- EP0957704 (A2)
- Bibliographic data
- Description
- Claims
- Mosaics
- Original document
- Cited documents
- Citing documents
- INPADOC legal status
- **INPADOC patent family**

Quick help

- Can I export this list?
- What happens if I click on "Download covers"?
- Can I sort the list?
- What happens if I click on the star icon?
- What is a patent family?
- What is an INPADOC patent family?
- Are all the documents in an INPADOC family equivalents?
- Why is the same document published several times in the same country?

Family list: EP0957704 (1999-11-24

Select all | Compact | ort (CSV | XLS) | Download covers (0) | Print

17 application(s) fo 957704 (A2)

1 2
page 1

Sort by: Priority date | Sort order: Descending | Sort

1. PLATE-SHAPED HOLDER HOUSING FOR DAILY USE AND/OR CONSUMER ARTICLES

Inventor:	Applicant:	EC:	IPC:	Publication info:	Priority date:
PAINSITH HERMANN [AT]	VICTORINOX AG [CH] PAINSITH HERMANN [AT]	A45C11/00 A45D29/20	A45C11/00 A45D29/20 B29C65/02 (+5)	AT251398 (T) 2003-10-15	1995-11-30

2. PLATE-SHAPED HOLDER HOUSING FOR DAILY USE AND/OR CONSUMER ARTICLES

Inventor:	Applicant:	EC:	IPC:	Publication info:	Priority date:
PAINSITH HERMANN [AT]	PAINSITH HERMANN [AT] VICTORINOX AG [CH]	A45C11/00 A45D29/20	A45C11/00 A45D29/20 B29C65/02 (+5)	AT277538 (T) 2004-10-15	1995-11-30

3. PLATE-SHAPED HOLDER HOUSING FOR DAILY USE AND/OR CONSUMER ARTICLES

Inventor:	Applicant:	EC:	IPC:	Publication info:	Priority date:
	PAINSITH HERMANN DIPL ING [AT]	A45C11/00 A45D29/20	A45C11/00 A45D29/20 B29C65/02 (+4)	ATA196195 (A) 1998-02-15 AT404237 (B) 1998-09-25	1995-11-30

4. Plate-shaped holder housing for daily use and/or consumer articles

Inventor:	Applicant:	EC:	IPC:	Publication info:	Priority date:
PAINSITH HERMANN	HERMANN PAINSITH VICTORINOX AG	A45C11/00 A45D29/20	A45C11/00 A45D29/20 B29C65/02 (+4)	AU7685396 (A) 1997-06-19	1995-11-30

5. Plate-shaped holder housing for daily use and/or consumer articles

Inventor:	Applicant:	EC:	IPC:	Publication info:	Priority date:
PAINSITH HERMANN [CH]	VICTORINOX AG [CH]	A45C11/00 A45D29/20	A45C11/00 A45D29/20 B29C65/02 (+5)	CN1207653 (A) 1999-02-10 CN1161059 (C) 2004-08-11	1995-11-30

6. PLATE-SHAPED HOLDER HOUSING FOR DAILY USE AND/OR CONSUMER ARTICLES

Inventor:	Applicant:	EC:	IPC:	Publication info:	Priority date:
	VICTORINOX AG IBACH [CH] PAINSITH HERMANN [AT]	A45C11/00 A45D29/20	A45C11/00 A45D29/20	DE29624203 (U1) 2001-04-26	1995-11-30

[AT]	VICTORINOX [CH]	A45C11/00	B29C65/02 (+5)	EP1293144 (A3) 2003-03-26 EP1293144 (B1) 2004-09-29	

9. PLATE-SHAPED HOLDER HOUSING FOR DAILY USE AND/OR CONSUMER ARTICLES

Inventor:	Applicant:	EC:	IPC:	Publication info:	Priority date:
PAINSITH HERMANN [AT]	VICTORINOX AG PAINSITH HERMANN	A45C11/00 A45D29/20	A45C11/00 A45D29/20 B29C65/02 (+5)	ES2208767 (T3) 2004-06-16 ES2208767 (T5) 2007-03-16	1995-11-30

10. PLATE-SHAPED HOLDER HOUSING FOR DAILY USE AND/OR CONSUMER ARTICLES

Inventor:	Applicant:	EC:	IPC:	Publication info:	Priority date:
PAINSITH HERMANN [AT]	PAINSITH HERMANN VICTORINOX AG	A45C11/00 A45D29/20	A45C11/00 A45D29/20 B29C65/02 (+5)	ES2230442 (T3) 2005-05-01	1995-11-30

11. Card-shaped storage case for articles of daily useand/or consumer articles.

Inventor:	Applicant:	EC:	IPC:	Publication info:	Priority date:
PAINSITH HERMANN	VICTORINOX AG [CH] PAINSITH HERMANN	A45C11/00 A45D29/20	A45C11/00 A45D29/20 B29C65/02 (+5)	HK1017592 (A1) 2005-02-25	1995-11-30

12. PLATE-SHAPED HOLDER HOUSING FOR DAILY USE AND/OR CONSUMER ARTICLES

Inventor:	Applicant:	EC:	IPC:	Publication info:	Priority date:
		A45C11/00 A45D29/20	A45C11/00 A45D29/20 B29C65/02 (+4)	JP2000501003 (A) 2000-02-02 JP4098360 (B2) 2008-06-11	1995-11-30

13. Plate-shaped holder housing for daily use and/or consumer articles

Inventor:	Applicant:	EC:	IPC:	Publication info:	Priority date:
PAINSITH HERMANN [AT]	VICTORINOX AG [CH]	A45C11/00 A45D29/20	A45C11/00 A45D29/20 B29C65/02 (+4)	US6044967 (A) 2000-04-04	1995-11-30

14. Card-shaped storage case for articles of daily use and/or consumer articles

Inventor:	Applicant:	EC:	IPC:	Publication info:	Priority date:
PAINSITH HERMANN [AT]	VICTORINOX AG [US]	A45C11/00 A45D29/20	A45C11/00 A45D29/20 B29C65/02 (+4)	US6257405 (B1) 2001-07-10	1995-11-30

15. Card-shaped storage case for articles of daily use and/or consumer articles

Inventor:	Applicant:	EC:	IPC:	Publication info:	Priority date:
PAINSITH HERMANN [AT]	VICTORINOX AG [US]	A45C11/00 A45D29/20	A45C11/00 A45D29/20 B29C65/02 (+6)	US2001047946 (A1) 2001-12-06 US6527112 (B2) 2003-03-04	1995-11-30

licationDetails/inpadocPatentFamily?CC=EP&NR=0957704B2&KC=B2&FT=D&ND=4&date=20060705&DB=worldwide.espacenet.com&locale=en_EP#

Europäisches Patentamt
European Patent Office
Office européen des brevets

Espacenet
Patent search

English Français
Contact
Change country

Acesso a publicações integrais de diversos países, incluindo publicações de pedidos BR

About Espacenet Other EPO online services

Search | Result list | My patents list (0) | Query history

EP0957704 (B2) → Family page 1 → US6044967 (A)

US6044967 (A)
- Bibliographic data
- Description
- Claims
- Mosaics
- **Original document**
- Cited documents
- Citing documents
- INPADOC legal status
- INPADOC patent family

Quick help
- What happens if I click on "In my patents list"?
- What happens if I click on the "EP Register" button?
- How can I maximise the page view?
- How can I download documents?

Original document: US6044967 (A) — 2000-04-04

In my patents list | Previous | 13 / 17 | Next | EP Register | Report data error | Print

Plate-shaped holder housing for daily use and/or consumer articles

Page 1/43 Abstract Bibliography | Maximise | Download

US006044967A

United States Patent [19]
Painsith

[11] **Patent Number: 6,044,967**
[45] **Date of Patent: Apr. 4, 2000**

[54] **PLATE-SHAPED HOLDER HOUSING FOR DAILY USE AND/OR CONSUMER ARTICLES**

[75] Inventor: **Hermann Painsith**, Klagenfurt, Austria

[73] Assignee: **Victorinox AG**, Ibach, Switzerland

[21] Appl. No.: **09/077,482**

[22] PCT Filed: **Dec. 2, 1996**

[86] PCT No.: **PCT/AT96/00238**
§ 371 Date: **May 29, 1998**
§ 102(e) Date: **May 29, 1998**

[87] PCT Pub. No.: **WO97/19856**
PCT Pub. Date: **Jun. 5, 1997**

[30] **Foreign Application Priority Data**

Nov. 30, 1995 [AT] Austria 1961/95

[51] **Int. Cl.**[7] **B65D 69/00**
[52] **U.S. Cl.** **206/234**; 206/37; 206/349
[58] **Field of Search** 206/216, 234, 206/38, 38.1, 235–241, 349, 37, 37.1, 37.4, 37.6

[56] **References Cited**

U.S. PATENT DOCUMENTS

5,467,871	11/1995	DeField	206/37.1
5,621,936	4/1997	Penaligon et al.	206/234

FOREIGN PATENT DOCUMENTS

739628	1/1933	France .
2656799 A1	7/1991	France .
3843303 A1	7/1989	Germany .
3827536 C1	11/1989	Germany .
2 146 623	4/1985	United Kingdom .
WO94/29083 A2	12/1994	WIPO .

Primary Examiner—Paul T. Sewell
Assistant Examiner—Luan K. Bui
Attorney, Agent, or Firm—Alston & Bird LLP

[57] **ABSTRACT**

The invention relates to a card-shaped storage case **(1)** made of metal or plastic with at least one internal storage compartment **(8)** for at least one article, which is defined by a base plate **(6)** and at least in sections by a cover plate **(7)** of the storage case **(1)** running parallel to this, wherein several storage compartments **(8)** at least partially separate from one another are arranged in the storage case **(1)** in a plane running parallel to the base plate **(6)** and/or cover plate **(7)** and are constructed to receive articles in the form of articles of daily use **(9)** and/or consumer articles and are also accessible from the outside via storage openings **(23)**, and the storage openings **(23)** are arranged in at least one of the longitudinal side faces **(4)** and/or transverse side faces **(5)** preferably running perpendicular to the base plate **(6)** and/or cover plate **(7)**.

40 Claims, 26 Drawing Sheets

Fontes de Informações Sobre Decisões, Jurisprudência

- EPO - Case Law and Appeals
  - http://www.epo.org/law-practice/case-law-appeals.html

- Blogs, Sites...
  - www.jusbrasil.com.br
  - www.ipwatchdog.com
  - www.patentdocs.org
  - Etc.

- Revista da ABPI

© 2016 www.axonal.com.br

Basic search - board of appeal decisions database
Advanced search - board of appeal decisions database
Recent decisions
Enlarged Board of Appeal
Case Law of the Boards of Appeal
Business distribution scheme
Case Law from the Contracting States to the EPC

Case law and appeals

The boards of appeal and associated administrative services are integrated into the organisational structure of the EPO as Directorate-General 3. They are independent from the Office in their decisions and are bound only by the European Patent Convention (EPC).

The boards of appeal decisions database

Comprehensive texts of each decision of the EPO boards of appeal contained in the database (since 1979). The decisions are available in the language of the proceedings (English, French or German).

→ Basic search engine
→ Advanced search engine
→ Recent decisions

Enlarged Board of Appeal

→ Pending referrals (Art. 112 EPC)
→ Decisions sorted by number (Art. 112 EPC)
→ Pending petitions for review (Art. 112a EPC)
→ Decisions on petitions for review (Art. 112a EPC)

Texts related to appeal proceedings

→ Business distribution scheme
Information from the Boards of Appeal including rules of procedure

Website updates

16.11.2012
Enlarged Board of Appeal: new petition for review (R 17/12)

8.11.2012
Enlarged Board of Appeal: new decisions on petition for review (R 20/11 and R 21/11)

2.10.2012
Enlarged Board of Appeal: new decision on petition for review (R 2/12)

→ Updates archive RSS: appeals

Case law

A substantial body of case law on the European Patent Convention has developed since the first decision of a board of appeal was handed down in 1979.

→ Case Law of the Boards of Appeal (sixth edition 2010)
EPO Board of Appeal Case Law 2011 (OJ Special edition 2012)
EPO Board of Appeal Case Law 2010 (OJ Special edition 2/2011)
EPO Board of Appeal Case Law 2009 (OJ Special edition 2/2010)
→ Recent decisions

Print

See also

→ Check the calendar of oral proceedings.

Find out more about the boards of appeal - their structure, organisation and what they do.

→ Boards of appeal

Read about a proposal to give the EPO's boards of appeal organisational autonomy and a judicial function.

Organisational autonomy of the boards of appeal

→ Standing Advisory Committee before the EPO (SACEPO)

→ European Round-Table on Patent Practice (EUROTAB)

email a friend | bookmark or share

HOT Items

- 02/01: The EPO's legal status file adds Slovakian data.
- 01/19: Google updates Google Scholar with legal opinion and journal search options.
- 01/11: The EPO announces addition of JP citations to DOCDB.
- 01/07: ChemAxon search platform JChem gains access to Thomson Reuters chemical IP Data Feeds including Markush Structures and patent data.
- 12/30: Online Public Access Prototype search system launched by the US National Archives.
- 12/14: Patent Lens Report fully reviewed and updated!

WELCOME TO INTELLOGIST!

To network with our international community of patent info pros, please create an account.

For a list of our current members, see our

Click here to read the Intellogist Blog!

Follow us on Twitter!

Search System Reports

See detailed information on search systems

Interactive Patent Coverage Map

Click on map to find patent search systems

Quick Table Comparisons

Delphion	Dialog	esp@cenet	PatBase
Yes	No	Yes	No
No	Yes	No	Yes

Quickly compare patent search systems

Best Practices in Prior Art Searching

Collaborate on prior art search practices

Resource Finder

abinit.org
chemsources.com
chemnetbase.com
iupac.org

Find prior art resources by technical field

Please Support Our Sponsor:

SIEMENS WATER TECHNOLOGIES IS USING THOMSON INNOVATION TO DO JUST THAT.

THOMSON REUTERS

Legal & Technical Translations
We speak your language (and theirs)
专利
Learn more
LANDON IP

INTELLOGIST
CONSULTING SERVICES
CUSTOMIZED EXPERT IP GUIDANCE

Patent Analysis
Put your IP to work
Learn more
LANDON IP

start | 3 Windows Explo... | 3 Microsoft Offic... | Caixa de Entrada -... | Forum registration ... | 1.pdf - Adobe Rea... | 91% of download.... | Intellogist - Windo... | 17:16

Portal Periódicos CAPES

http://www.periodicos.capes.gov.br

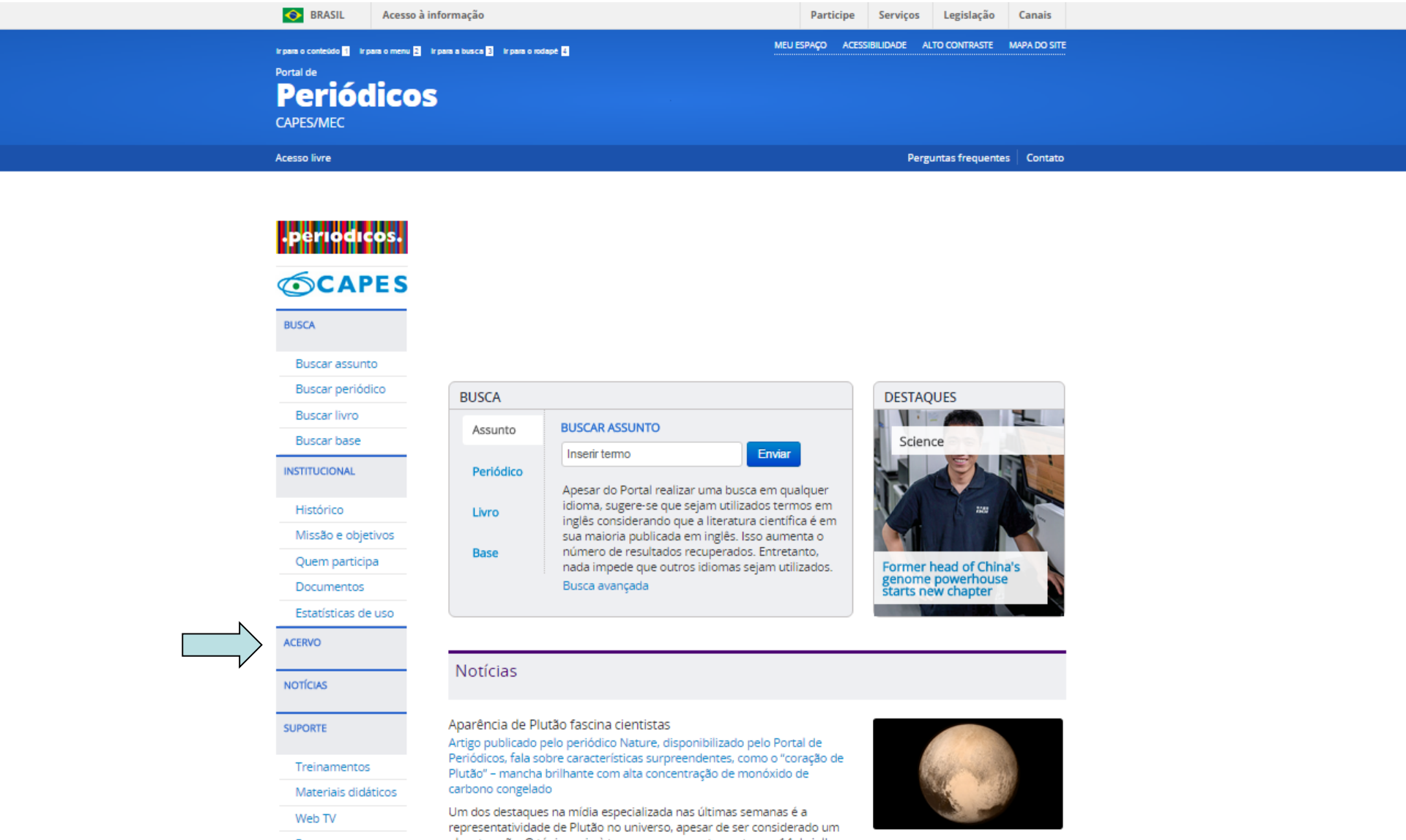

Portal Periódicos CAPES

http://www.periodicos.capes.gov.br

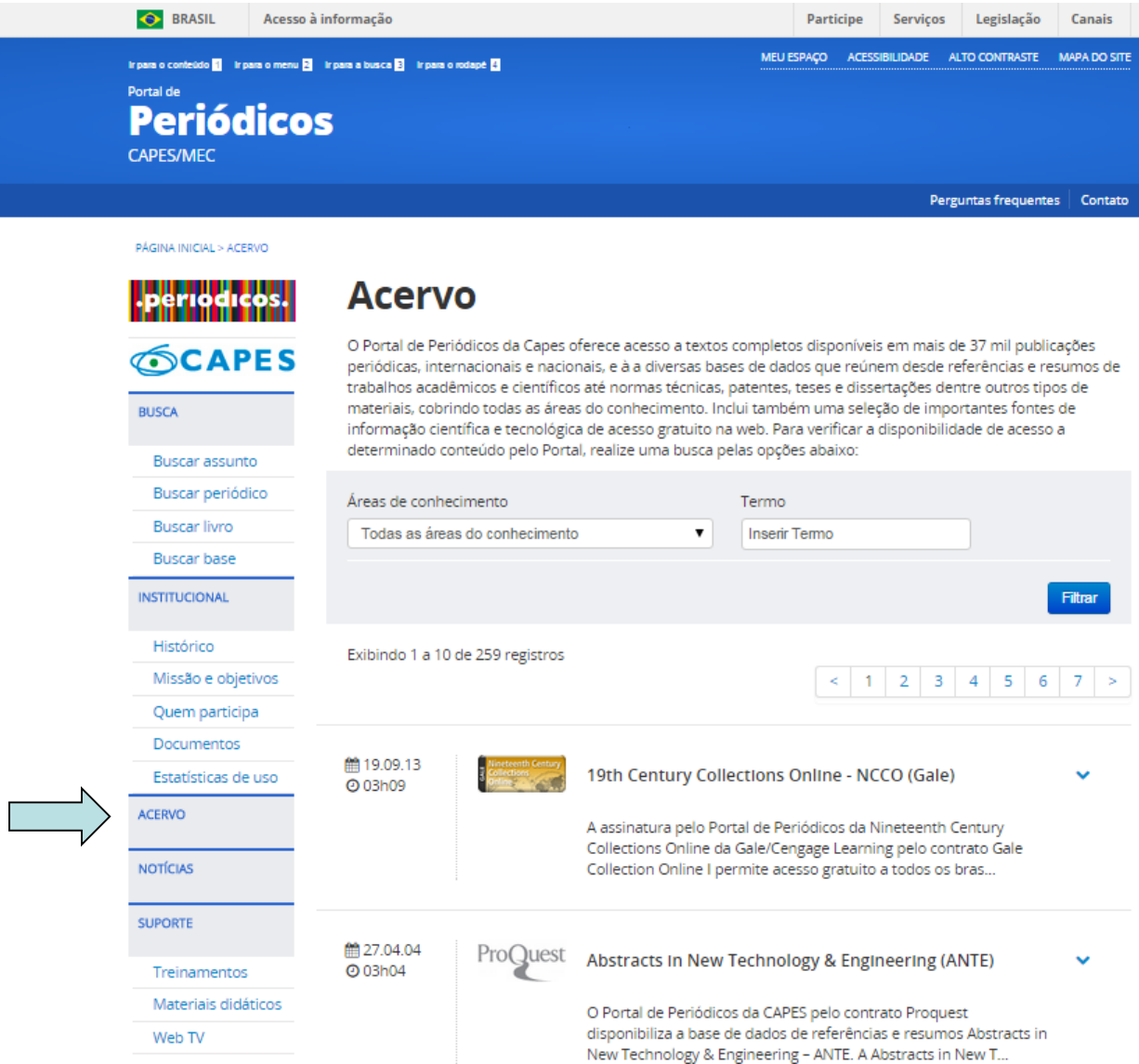

Portal Periódicos CAPES

http://www.periodicos.capes.gov.br

Web of Science

Disponível desde 19.10.00

Base de dados referencial com resumos em todas as áreas do conhecimento.

A base referencial multidisciplinar, Web of Science, que está integrada à base ISI Web of Knowledge. Oferece ferramentas para análise de citações, referências, índice h, permitindo análises bibliométricas. Cobre aproximadamente 12.000 periódicos. A assinatura deste conteúde, oferece a possibilida de consulta a 5 coleções: Science Citation Index Expanded (SCI-EXPANDED) - com disponibilidade de acesso a registros desde 1945 até o presente; Social Sciences Citation Index (SSCI) - com disponibilidade de acesso a registros desde 1956 até o presente; Arts & Humanities Citation Index (A&HCI) - com disponibilidade de acesso a registros desde 1975 até o presente; Conference Proceedings Citation Index- Science (CPCI-S) - com disponibilidade de acesso a registros desde 1990 até o presente e Conference Proceedings Citation Index - Social Science & Humanities (CPCI-SSH) - com disponibilidade de acesso a registros desde 1990 até o presente.

http://apps.webofknowledge.com/

© 2016 www.axonal.com.br

Portal Periódicos CAPES

http://www.periodicos.capes.gov.br

Derwent Innovations Index (DII)

Disponível desde 22.10.09

Base de dados de patentes nas áreas de engenharia química, elétrica, eletrônica e mecânica.

Integrada à plataforma ISI Web of Kowledge, da Thomson Reuters, a Derwent Innovations Index (DII) é uma base de dados que possui referências e resumos de patentes com links para documentos em texto completo, se disponíveis, além de referências relacionadas nas áreas de: engenharia química, elétrica, eletrônica e mecânica. O período disponível para acesso é de 1966 até o presente.

http://wokinfo.com/products_tools/multidisciplinary/dii/

© 2016 www.axonal.com.br

Portal Periódicos CAPES

http://www.periodicos.capes.gov.br

Scopus

Disponível desde 13.01.06

Base de dados referencial nas áreas de Ciências Biológicas, Ciências da Saúde, Ciências Físicas e Ciências Sociais.

Oferece acesso a base referencial, da Editora Elsevier, que indexa títulos acadêmicos revisados, títulos de acesso livre, anais de conferências, publicações comerciais, séries de livros, páginas web de conteúdo científico(reunidos no Scirus) e patentes de escritórios. Dispõe de funcionalidades de apoio à análise de resultados(bibliometria), como identificação de autores e filiações, análise de citações, análise de publicações e índice H. Cobre as áreas de Ciências Biológicas, Ciências da Saúde, Ciências Físicas e Ciências Sociais. Período de acesso desde 1823 até o presente.

http://www.scopus.com/home.url

© 2016 www.axonal.com.br

Portal Periódicos CAPES

http://www.periodicos.capes.gov.br

CAB Abstracts

Disponível desde 01.12.00

Base de dados referencial nas áreas de Ciências Agrárias, Ciências Biológicas e Ciências Ambientais.

Oferece acesso a base de dados referencial CAB Abstract que é acessada através da plataforma Ovid. É uma base de dados compilada pela CAB INTERNATIONAL que contém resumos de aproximadamente 9.000 periódicos nas áreas de agricultura, agronomia, solos, pesticidas, horticultura, florestas, veterinária, fertilizantes, genética, meio ambiente, biologia e nutrição. Disponibilidade de acesso desde 1990 até o presente.

http://www.ovid.com/site/catalog/DataBase/31.jsp

CABI compendia

Disponível desde 23.06.08

Enciclopédias interativas que reúnem informação científica nas áreas de agricultura, sistemas agroflorestais, pecuária, aquacultura.

Oferece acesso a 5 enciclopédias interativas da CABI compendia que reúnem uma grande variedade de informação científica nas áreas de ciências agrárias e ambientais. Cada Compêndio inclui informações de especialistas, editado e compilado por uma organização científica independente. São elas: Animal Health and Production Compendium; Aquaculture Compendium; Crop Protection Compendium; Forestry Compendium; e Invasive Species Compendium.

http://www.cabi.org/default.aspx?site=170&page=1030

© 2016 www.axonal.com.br

Portal Periódicos CAPES

http://www.periodicos.capes.gov.br

Compendex Engineering Index (Ei)

Disponível desde 23.10.09

Engineering Village

Base de dados referencial com registros nas áreas de Engenharia.

Oferece acesso a base referencial, Compendex Engineering Index, que publica mais de 10 milhões de registros e referências de mais de 5.600 periódicos e anais de conferências com disponibilidade desde 1969 até o presente. As publicações cobrem as áreas de Engenharia, Energia, Ciência da Computação, Robótica e Controle.

http://www.engineeringvillage2.org/controller/servlet/Controller?CID=quickSearch&database=1

© 2016 www.axonal.com.br

Portal Periódicos CAPES

http://www.periodicos.capes.gov.br

INSPEC

Disponível desde 01.01.04

Acesse base de dados referencial da Institution of Engineering and Technology (IET).

A base INSPEC possui cobertura abrangente nos campos da eletrônica, ciência da computação, física, elétrica, controle, produção e engenharia mecânica. Disponibiliza resumos de artigos selecionados de cerca de 4.000 revistas científicas e técnicas, cerca de 2.500 conferências, bem como livros, relatórios e dissertações. Período disponível online desde 1969 até o presente.

http://ovidsp.ovid.com/ovidweb.cgi?T=JS&NEWS=n&CSC=Y&PAGE=main&D=insz

© 2016 www.axonal.com.br

Portal Periódicos CAPES

http://www.periodicos.capes.gov.br

SciFinder

Disponível desde 03.01.05

Ferramenta de pesquisa do Chemical Abstracts Service (CAS), a SciFinder é um serviço de indexação de periódicos científicos na área de Química Orgânica, Química Inorgânica, Físicoquímica, Química Analítica, Engenharia Química, Processamento de Petróleo, Tintas, Revestimentos, Engenharia Sanitária, Poluição do Ar e da Água, Tratamento de Resíduos, Ciências Ambientais, Farmacologia, Toxicologia, Medicina Experimental, Biologia Celular e Molecular, Genética, Genoma, Proteoma, Bioquímica, Microbiologia, Enzimologia, Alimentos, Física, Química e Engenharia de Materiais, Polímeros, Elastômeros, Ligas, Cerâmica. Agrega informações de mais de 61 autoridades de patentes incluindo patentes anteriores a 1907. São seis bases de dados disponíveis:

- Caplus (1907-presente);

- Registry (1907-presente);

- Chemical Reactions (1840-presente);

- Substâncias Químicas Regulamentadas (1778-presente);

- CHEMCATS;

- Medline (Saúde).

http://scifinder.cas.org

© 2016 www.axonal.com.br

Portal Periódicos CAPES

http://www.periodicos.capes.gov.br

Science Direct

Disponível desde 01.01.01

Acesso a textos completos em diversas áreas, além de arquivos multimídias, periódicos, livros eletrônicos e enciclopédias.

Oferece acesso a base Science Direct que permite acesso à coleção Freedom Collection. Esta coleção contém cerca de 1.800 periódicos em texto completo publicados pela Elsevier em todas as áreas do conhecimento, mas com foco nas áreas de ciências, tecnologia e medicina. A cobertura de texto completo dos periódicos da coleção está disponível desde 1995 até o presente.

http://www.info.sciverse.com/sciencedirect

© 2016 www.axonal.com.br

Fontes de Informações Patentárias (Comerciais)

- Questel FAMPAT
- Derwent WPI
- Chemical Abstracts CAPLUS
- Etc...
- Intellogist (www.intellogist.com)

© 2016 www.axonal.com.br

Fontes de Informações Patentárias (Comerciais)

- Questel Orbit
- Innography
- PatBase
- Derwent Innovations Index
- Thomson Innovation
- Total Patent
- Etc...

- Intellogist (www.intellogist.com)

© 2016 www.axonal.com.br

Ex. Questel Orbit

Formulário de busca intuitivo com múltiplos campos e possibilidades de combinação.

Orbit.com | Coverage detail | Latest News | Download Patents Module Manual (Regular Search) | Logout

Patents

Search Patents...

Searches
- General search
- Number search
- Citation search

My Session
- Search history
- Search results
- Cost estimator

Past Sessions
- Previous History
- Previous Analysis

My Searches
- My saved searches
- My alerts

My Lists New
- Quicklist (0)

General search

Keywords
- Title, Abstract, Key Content, Claims: effervescent — E.g.:Telecom+OR phone
- Title, Abstract, Key Content: tablet

Classifications
- and IPC — Browse — E.g.:G10L-015

Names
- Assignee (Original or Current) — Corporate Tree — E.g.:Siemens Nixdorf
- Inventor: — E.g.:Fleming Alexander, Moyer Andrew
- Representative: — E.g.:Baker Botts

Numbers, Dates & Country
- Publ. number — E.g.:EP0980063
- Date: No Restriction
- Publication country: — E.g.:US, EP

More fields
- Abstracts

Restriction

Search | Show the cmd. line | Create script | Clear

Geração automática de linha de comando avançada editável

((effervescent)/BI/SA/CLMS AND (tablet))

Possibilidade de buscas avançadas com uso de conectores de proximidade, múltiplos parênteses, indexadores de campos e truncagem à direita, à esquerda e no meio de termos de busca

Done | Internet | 100%

Ex. Questel Orbit

Formulário de busca intuitivo com múltiplos campos e possibilidades de combinação.

Keywords

Title

- Title
- Title, Abstract
- Title, Abstract, Claims
- Title, Abstract, Key Content
- Title, Abstract, Key Content, Claims
- Claims
- Description
- Independent Claims
- Key Content
- Concepts
- Full Text

Restriction

Limit to the following legal status:

No restriction

- No restriction
- Patent in force
- Opposition
- Licensing
- Term right extended
- Ownership
- Entry into national phase
- Not in force

Names

Assignee (Original or Current)

- Assignee (Original or Current)
- Current Assignee
- Original Assignee

Classifications

IPC

- IPC
- ECLA
- ICO
- US (main)
- US (main & x-ref)
- FI
- F-Terms

Numbers, Dates & Country

Publ. number

- Publ. number
- Appl. number
- Priority number
- Application or Priority number

More fields

- Abstracts
- Advantages over prior art drawbacks
- Object of invention
- Citations, all
- Citations, non patent References
- Designated States
- FamPat Family Number
- PCT Publication number
- PCT Application Nbr
- Patent Assignee Country
- Patent Assignee US State
- Inventor Country
- Inventor US State
- Representative Country
- US and FR Filing Details
- Other Publication Dates
- First Date of Pub.Appl.
- First Date of Issued Grant
- Patent Date, last pub.
- First Family's Priority Date
- EPO Dutch Class
- Number of Patents in the FamPat Family
- Number of Priorities in the FamPat Family
- USPTO Examiner or US Representative
- Independant claim number (US)
- Number of claims (US)
- Number of drawings (US)
- Number of figures (US)
- US Case ID

Abstracts

Ex. Questel Orbit

Orbit.com

Erase all | Save entire strategy | Create a script | Export | Logout

Patents

- Searches
  - General search
  - Number search
  - Citation search
- My Session
  - Search history
  - Search results
  - Cost estimator
- Past Sessions
  - Previous History
  - Previous Analysis
- My Searches
  - My saved searches
  - My alerts
- My Lists New
  - Quicklist (0)

Full Text merged in families (FamPat) | Bibliography by country (PlusPat) | Full Text by publication

Search Step	Result(s)	Query	Assistant	Source	Action
4	2	3 AND BR/PC	Search history	FAMPAT	Show results • Modify • Save • Alert • Delete
3	179	1 AND 2	Search history	FAMPAT	Show results • Modify • Save • Alert • Delete
2	108077	(KEYBOARD)/BI/SA	General search	FAMPAT	Show results • Modify • Save • Alert • Delete
1	52969	(COLLAPSIBLE)/BI/SA	General search	FAMPAT	Show results • Modify • Save • Alert • Delete

Possibilidade de gravação de buscas para posterior execução

Combine strategies, E.g.: (1 or 2) not 3, 1 and (phone+)

3 and br/pc

Histórico de busca automaticamente gerado e pesquisável

Search

Done | Internet | 125%

Ex. Questel Orbit

Painéis de visualização em paralelo e múltiplas opções de visualização permitem aumento de produtividade na avaliação dos documentos

Orbit.com | Display | Add to | Export | Top | Citations | Translate | Compare | Save | Alert | Analyse | Logout

Menu

Search Patents...

- Searches
  - General search
  - Number search
  - Citation search
- My Session
  - Search history
  - Search results
  - Cost estimator
- Past Sessions
  - Previous History
  - Previous Analysis
- My Searches
  - My saved searches
  - My alerts
- My Lists New
  - Quicklist (0)

181 results for (COLLAPSIBLE AND KEYBOARD)/BI/SA

FAMPAT | Select all results,Clear selection | 100 results are selected. | Google | Sort by relevance

#	Title	Original or current assignee	Publ. number	Pr. Date
1.	MULTI-PIECE STAND FOR MOBILE COMPUTING DEVICE	BELKIN	WO2011047217	2009-10-14
2.	Electromagnetic isolation chamber for accurately manipulating devices therein	LEEGATE GARY CONRAD; LEEGATE ROLLAND STEPHEN	US2011031009	2009-08-04
3.	Bedtime Computer Table	TCHOLAKOV STAYKO	US2010300334	2009-05-29
4.	HANDHELD ELECTRONIC DEVICE AND KEYBOARD HAVING MULTIPLE-FUNCTION KEYS	FYKE STEVEN HENRY	US2010271309	2004-02-24
5.	DETECTING KEY ACTUATION IN A KEYBOARD	OLODORT ROBERT; TANG JOHN; TURCHIK RANDY	US2010271310	1997-11-12
6.	(U3) Collapsible keyboard		JP3092668	2002-09-09
7.	Improvements in collapsible typewriting machines	REMINGTON TYPEWRITER	US1467995	1922-01-31
8.	Typewriting machine	REMINGTON TYPEWRITER	US1468274	1922-03-16
9.	HEIGHT-ADJUSTABLE EQUIPMENT STAND	JANSSEN RAINER	WO2009124523	2008-04-08
10.	COLLAPSIBLE KEYBOARD	GIGA BYTE TECHNOLOGY; GYGA BYTE TECHNOLOGY	WO2009100607	2008-01-31
11.	Split type laptop type collapsible soft keyboard	XU CHEN	CN101135932	2007-08-14
12.	Foldable electronic seat label	SHANGHAI BEIDA FOUNDERTECH COM	CN200993853	2006-12-30
13.	Portable Computer Stand	LEUNG CHILY C	US2008142662	2006-12-16
14.	Multimedia digital book	LIU JIANSHENG	CN200976144	2006-11-24
15.	Bar, folding dual-purpose handset	XU GANGBIN	CN200944615	2006-08-22
16.	ADAPTABLE BI-FOLD SCRAPBOOK AND CRAFT WORKSTATION	ENSIGN INTERNATIONAL	WO2007146134	2006-06-07
17.	FOLDING ELECTRONIC PIANO COMPRISING KEYBOARD-STIFFENING MEANS	PARIENTI RAOUL; RAOUL PARIENTI	WO2006114531	2006-04-28
18.	ELECTRONIC DEVICE FOR CONDUCTING PROGRAMMED FUNCTIONS (VARIANTS) AND METHOD FOR INPUTTING COMMANDS IN SUCH A DEVICE	LG ELECTRONICS	RU2319997	2005-12-30
19.	Keyboard and its input method	LENOVO	CN100447718	2005-12-23
20.	DASHBOARD PROVIDED WITH FOLDABLE TABLE	RENAULT	WO2007060352	2005-11-28
21.	COLLAPSIBLE PROJECTION ASSEMBLY	CTS; MOTOROLA	WO2006118760	2005-04-29
22.	Ventilation support for laptop computers	SAAD DAVID J	US2006243878	2005-04-27
23.	HANDHELD ELECTRONIC DEVICE PROVIDING FEEDBACK TO FACILITATE NAVIGATION AND THE ENTRY OF INFORMATION, AND ASSOCIATED METHOD	RESEARCH IN MOTION	US2010315344	2005-02-09

Page 1 of 2 | Record 10 of 181 | Displaying records 1 - 100 of 181

Preview | Drawings | Image | Key Content | Concepts

COLLAPSIBLE KEYBOARD

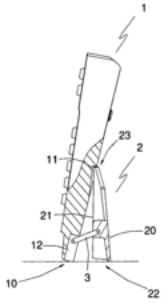

图 2

AB
(WO2009100607)
A collapsible keyboard includes a keyboard body (1), a hand rest (2) and at least one connecting component (3). The keyboard body (1) has a connecting side (10) towards the side of the user. The hand rest (2) has a bearing surface (20), a first side (22) and a second side (23), the bearing surface (20) supporting the wrist of the user, the first side (22) facing the connecting side (10) of the keyboard body (1), the second side (23) locating the reverse side of the first side (22). The connecting component (3) is set between the keyboard body (1) and the hand rest (2), and the two ends of the connecting component (3) are connected rotatably to the keyboardbody (1) and the hand rest (2) respectively, for folding the hand rest (2) to the rear of the keyboard body (1). The second side (23) is engaged with the rear of the keyboard body (1), and the connecting side (10) of the keyboard body (1) and the first side (22) of the hand rest (2) are formed a support plane, for erecting the keyboard body (1) in a manner that the connecting side (10) faces downwards. The collapsible keyboard can be stably and vertically folded to reduce the table space occupation.

IN	LIN CHENHSING
PA	GIGA BYTE TECHNOLOGY GYGA BYTE TECHNOLOGY
PAH	(WO2009100607) (A1) GYGA BYTE TECHNOLOGY CO LTD (CN); LIN CHENHSING (CN) (CN201145884U) (Y) GIGA BYTE TECH CO LTD (CN)
PA0	LIN, Chenhsing / No. 6, Bau Chiang Road, Hsin-Tien (CN) (only US)
PP	(WO2009100607)

Done | Internet | 100%

Ex. Questel Orbit

Possibilidade de edição dos termos grifados e gravação de perfis para uso posterior.

Orbit.com | Back to list | Add to | Export | Translate | Compare | Logout

Menu | Detail | Biblio | Claims | Description | Key Content | Concepts | Fulltext | Status | Timeline (beta)

70 / 179 - Patent Family

- JP2004513415 T
- US6679639 B2
- US6594142 B2
- EP1305699 A2
- US2002191999 A1
- CA2366636 A1
- PCT WO200208876 A3
- PCT WO200208877 A3
- US2002030965 A1
- AU7225201 A
- AU7562701 A
- PCT WO200208877 A2
- PCT WO200208876 A2

Find similar patents
Find Inpadoc family
Graph Inpadoc family

FOLDING KEYBOARD FOR A PERSONAL DIGITAL ASSISTANT

AB
(WO200208877)
Prior collapsible keyboards for personal digital assistants are overly complex and large. The present invention provides a folding keyboard for a personal digital assistant which folds up simply and in a small size and which is useful for standard typists. It is divided into two halves hingedly connected along a fold line. While the central or home row keys are standard size, the other two rows of keys are of reduced transverse dimension and are preferably so shaped as to allow a touch typist to use existing movements without missing the keys of reduced size.

IN KATZ MICHAEL

OIN カツ、マイケル

PA KATZ MICH
MICHAEL K
POCKETOP

PA0 KATZ, Mich

OPA カツ、マ

Published As

	Publ. number	Pub. date	App			
	JP2004513415	20040430	200			
	US6679639	20040120				
	US6594142	20030715				
	EP1305699	20030502	200			
	US2002191999	20021219	200			
	CA2366636	20021108	200			
PCT	WO200208876	20020404				
PCT	WO200208877	20020321				
	US2002030965	20020314	200			
	AU7225201	20020205	2001	AU-0072252	20010718	A - Open to public inspection
	AU7562701	20020205	2001	AU-0075627	20010718	A - Open to public inspection
PCT	WO200208877	20020131	2001	WO-CA00983	20010718	A2 - International application publis
PCT	WO200208876	20020131	2001	WO-CA01047	20010718	A2 - International application publis

PR
2000US-P219125 20000719
2001US-0850158 20010508
2001WO-CA00983 20010718
2001WO-CA01047 20010718
2002US-0179169 20020626

PCL
341022000 345168000 345169000 361679140 361679150 361679160 400088000 400472000 400488000

Record 70 of 179

Highlight Wizard

Highlight
Fill in the form to highlight specific terms.

My profiles: Last search

collaps+, fold+, retract+	E.g.: bicycl+
keyboard	E.g: +digest+
	E.g: +inflamatory
	E.g: cold,cool+,freez+
	E.g: polymeri#ation
	E.g: brake disc

Clear | Apply | Ok | Cancel

Localizar

(12) INTERNATIONAL APPLICATION PUBLISHED UNDER THE PATENT COOPERATION TREATY (PCT)

(19) World Intellectual Property Organization
International Bureau

(10) International Publication Number
WO 02/08877 A2

PCT

(74) Agent: GREEN, Bruce, M.; Oyen Wiggs Green & Mutala, 601 West Cordova Street #480, Vancouver, British Columbia V6B 1G1 (CA).

(81) Designated States (national): AE, AG, AL, AM, AT, AU (utility model), AU, AZ, BA, BB, BG, BR, BY, BZ, CA, CH, CN, CO, CR, CU, CZ, CZ (utility model), DE, DE (utility model), DK, DK (utility model), DM, DZ, EC, EE, EE (utility model), ES, FI, FI (utility model), GB, GD, GE, GH, GM, HR, HU, ID, IL, IN, IS, JP, KE, KG, KP, KR, KZ, LC, LK, LR, LS, LT, LU, LV, MA, MD, MG, MK, MN, MW, MX, MZ, NO, NZ, PL, PT, RO, RU, SD, SE, SG, SI, SK, SK (utility model), SL, TJ, TM, TR, TT, TZ, UA, UG, US, UZ, VN, YU, ZA, ZW.

(84) Designated States (regional): ARIPO patent (GH, GM, KE, LS, MW, MZ, SD, SL, SZ, TZ, UG, ZW), Eurasian patent (AM, AZ, BY, KG, KZ, MD, RU, TJ, TM), European patent (AT, BE, CH, CY, DE, DK, ES, FI, FR, GB, GR, IE, IT, LU, MC, NL, PT, SE, TR), OAPI patent (BF, BJ, CF, CG, CI, CM, GA, GN, GQ, GW, ML, MR, NE, SN, TD, TG).

[Continued on next page]

WO 02/08877 A2

(57) Abstract: Prior collapsible keyboards for personal digital assistants are overly complex and large. The present invention provides a folding keyboard for a personal digital assistant which folds up simply and in a small size and which is useful for standard typists. It is divided into two halves hingedly connected along a fold line. While the central or home row keys are standard size, the other two rows of keys are of reduced transverse dimension and are preferably so shaped as to allow a touch typist to use existing movements without missing the keys of reduced size.

Displaying records 1 - 100 of 179

Done | Internet | 100%

Ex. Questel Orbit

Barra de rolagem mostra a localização dos termos grifados no texto integral

Orbit.com | Back to list | Add to | Export | Translate | Compare | Logout

Menu | Detail | Biblio | Claims | Description | Key Content | Concepts | Fulltext | Kwic | Citations | Images | First Page | Complete | Legal Status | Timeline (beta)

70 / 179 - Patent Family

- JP2004513415 T
- US6679639 B2
- US6594142 B2
- EP1305699 A2
- US2002191999 A1
- CA2366636 A1
- PCT WO200208876 A3
- PCT WO200208877 A3
- US2002030965 A1
- AU7225201 A
- AU7562701 A
- PCT WO200208877 A2
- PCT WO200208876 A2

Find similar patents
Find Inpadoc family
Graph Inpadoc family

(A2) FOLDING KEYBOARD FOR A PERSONAL DIGITAL ASSISTANT

FT
(A2) CLAVIER REPLIABLE POUR UN ORDINATEUR DE POCHE

AB
Prior collapsible keyboards for personal digital assistants are overly complex and large. The present invention provides a folding keyboard for a personal digital assistant which folds up simply and in a small size and which is useful for standard typists. It is divided into two halves hingedly connected along a fold line. While the central or home row keys are standard size, the other two rows of keys are of reduced transverse dimension and are preferably so shaped as to allow a touch typist to use existing movements without missing the keys of reduced size.

FAB
Les claviers pliants connus, équipant les ordinateurs de poche, sont extrêmement complexes et encombrants. Le clavier pliant selon l'invention, destiné à un ordinateur de poche, se plie simplement, est peu encombrant et peut être utilisé pour des travaux de dactylographie standard. Il est divisé en deux parties égales, reliées de manière articulée le long d'une ligne de repliement. Les touches de la rangée centrale et de la rangée d'appui sont de dimensions standard, tandis que les deux autres rangées de touches présentent des dimensions réduites transversalement et sont configurées de préférence de façon à permettre à un dactylographe qualifié d'avoir recours aux mouvements existants sans rater les touches de dimensions réduites.

IN	(A2) KATZ MICHAEL (CA)
PA	KATZ MICHAEL (CA)
PAH	(A2) KATZ MICHAEL (CA)
PA0	KATZ, Michael; 105 West 18th Avenue, Vancouver, British Columbia V5Y 2A6 (CA)
PA1	(A2) KATZ MICHAEL (CA)
RP	(A2) GREEN, Bruce, M.; Oyen Wiggs Green & Mutala, 601 West Cordova Street #480, Vancouver, British Columbia V6B 1G1 [CA]

Published As

	Publ. number	Pub. date	Appl. number	Appl. date	Publ. Stage	Links
PCT	WO0208877	20020131			A2 -	

AP
WOCA0100983 20010718 [2001WO-CA00983]

PR
US85015801 20010508 [2001US-0850158]
US21912500P 20000719 [2000US-P219125]

FD
US85015801 20010508 [2001US-0850158] : 8501580120010508 [2001US-0850158]

IC
G06F-001/16

ICO
T04M-001/02A2B4
T04M-001/725F1B

ICAA
G06F-003/02 [2006-01 A F I R M JP];
G06F-001/16 [2006-01 A - I R M EP];
H01H-013/702 [2006-01 A L I R M JP];
H04M-001/02 [2006-01 A - I R M EP];
H04M-001/23 [2006-01 A - I R M EP];

Record 70 of 179

1 / 15 | 53,4%

(12) INTERNATIONAL APPLICATION PUBLISHED UNDER THE PATENT COOPERATION TREATY (PCT)

(19) World Intellectual Property Organization
International Bureau

(43) International Publication Date
31 January 2002 (31.01.2002)

PCT

(10) International Publication Number
WO 02/08877 A2

(51) International Patent Classification⁷: G06F 1/16
(21) International Application Number: PCT/CA01/00983
(22) International Filing Date: 18 July 2001 (18.07.2001)
(25) Filing Language: English
(26) Publication Language: English
(30) Priority Data:
60/219,125 19 July 2000 (19.07.2000) US
09/850,158 8 May 2001 (08.05.2001) US
(63) Related by continuation (CON) or continuation-in-part (CIP) to earlier application:
US 09/850,158 (CON)
Filed on 8 May 2001 (08.05.2001)
(71) Applicant and
(72) Inventor: KATZ, Michael [CA/CA]; 105 West 18th Avenue, Vancouver, British Columbia V5Y 2A6 (CA).

(74) Agent: GREEN, Bruce, M.; Oyen Wiggs Green & Mutala, 601 West Cordova Street #480, Vancouver, British Columbia V6B 1G1 (CA).
(81) Designated States (national): AE, AG, AL, AM, AT, AT (utility model), AU, AZ, BA, BB, BG, BR, BY, BZ, CA, CH, CN, CO, CR, CU, CZ, CZ (utility model), DE, DE (utility model), DK, DK (utility model), DM, DZ, EC, EE, EE (utility model), ES, FI, FI (utility model), GB, GD, GE, GH, GM, HR, HU, ID, IL, IN, IS, JP, KE, KG, KP, KR, KZ, LC, LK, LR, LS, LT, LU, LV, MA, MD, MG, MK, MN, MW, MX, MZ, NO, NZ, PL, PT, RO, RU, SD, SE, SG, SI, SK, SK (utility model), SL, TJ, TM, TR, TT, TZ, UA, UG, US, UZ, VN, YU, ZA, ZW.
(84) Designated States (regional): ARIPO patent (GH, GM, KE, LS, MW, MZ, SD, SL, SZ, TZ, UG, ZW), Eurasian patent (AM, AZ, BY, KG, KZ, MD, RU, TJ, TM), European patent (AT, BE, CH, CY, DE, DK, ES, FI, FR, GB, GR, IE, IT, LU, MC, NL, PT, SE, TR), OAPI patent (BF, BJ, CF, CG, CI, CM, GA, GN, GQ, GW, ML, MR, NE, SN, TD, TG).

[Continued on next page]

(54) Title: FOLDING KEYBOARD FOR A PERSONAL DIGITAL ASSISTANT

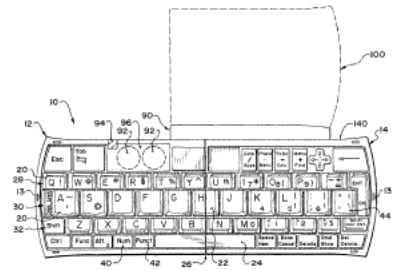

(57) Abstract: Prior collapsible keyboards for personal digital assistants are overly complex and large. The present invention provides a folding keyboard for a personal digital assistant which folds up simply and in a small size and which is useful for standard typists. It is divided into two halves hingedly connected along a fold line. While the central or home row keys are standard size, the other two rows of keys are of reduced transverse dimension and are preferably so shaped as to allow a touch typist to use existing movements without missing the keys of reduced size.

WO 02/08877 A2

Visualização em modo "Fulltext" permite leitura de descrição e visualização de figuras em paralelo

Displaying records 1 - 100 of 179

Done | Internet | 100%

Ex. Questel Orbit

Possibilidade de ordenamento dos resultados por relevância

Orbit.com | Display | Add to | Export | Top | Citations | Translate | Compare | Save | Alert | Logout

Menu

Search Patents...

- Searches
  - General search
  - Number search
  - Citation search
- My Session
  - Search history
  - Search results
  - Cost estimator
- Past Sessions
  - Previous History
- My Searches
  - My saved searches
  - My alerts
- My Lists New
  - Quicklist (0)

179 results for ((collapsible)/BI/SA AND (keyboard)/BI/SA)

Select all results | Google | Sort by relevance

#	Title	Original or current assignee	Publ. number	Pr. Date
51.	Collapsible keyboard	CHANGSHU SUNREX TECHNOLOGY	US6547463	2002-01-16
52.	WIRELESS KEYBOARD FOR HAND-HELD COMPUTERS	POCKETOP COMP; POCKETOP COMPUTER	WO03060681	2002-01-04
53.	Collapsible keyboard	DARFON ELECTRONICS	US2003122690	2001-12-28
54.	COLLAPSIBLE PORTABLE COMMUNICATION TERMINAL	FDK	JP2003198664	2001-12-28
55.	MECHANISM FOR UNFOLDING AND FOLDING OF FOLDING KEYBOARDS OF PORTABLE COMPUTERS AND SIMILAR DEVICES	KORSAKOV GRIGORIJ	WO2004006077	2001-12-11
56.	Collapsible keyboard	LITE ON TECHNOLOGY	US2003063939	2001-09-28
57.	Collapsible keyboard	YAN HUEI SHIANG; YEN HUEY SHIANG	US2003048595	2001-09-10
58.	Foldable keyboard work platform and carrying case		US2003034263	2001-08-17
59.	Key switch	BEHAVIOR TECH COMPUTER	US2003029708	2001-08-10
60.	Collapsible keyboard	BEHAVIOR TECH COMPUTER	US2003030623	2001-08-10
61.	Collapsible/folding mini USB/MIDI keyboard controller		US2003019346	2001-07-27
62.	POP-UP ELECTRONIC EQUIPMENT ENCLOSURE	LAPDOME	WO0200[illegible]	2001-06-06
63.	COLLAPSIBLE PANEL FOR AN ELECTRONIC DEVICE	BORUCKI GREGORY C; CECCHI MARINO; QUINN BRIAN P	[illegible]004051618	2001-05-11
64.	Stroller with programmable information module	GERICO CHILDR[illegible]	US2003132612	2001-05-09
65.	Flat hanging compu[illegible]	[illegible]	[illegible]02149905	2001-04-11
66.	Height-adjusting col[illegible] button key	[illegible]	[illegible]02148711	2001-04-11
67.	Portable computer [illegible]	[illegible]	[illegible]02100398	2001-01-31
68.	Ergonomic furniture	FARIA SABRINA ANN; LAWRENCE R C	GB2369565	2000-12-04
69.	Collapsible computer mouse pad		US2002117588	2000-10-04
70.	FOLDING KEYBOARD FOR A PERSONAL DIGITAL ASSISTANT	KATZ MICHAEL; MICHAEL KATZ; POCKETOP COMPUTERS	WO200208877	2000-07-19
71.	Folding keyboard for a personal digital assistant	POCKETOP COMPUTERS	US2005025551	2000-07-19
72.	Method and system for web management	EGRAIL	EP1172734	2000-07-12
73.	Collapsible keyboard	DARFON ELECTRONICS	US2002003530	2000-07-05
74.	Collapsible keyboard	ACER; DARFON ELECTRONICS	US2002001498	2000-07-01
75.	Electronic device with collapsible display	IPG ELECTRONICS 503; PHILIPS	EP1193953	2000-06-30

Page 3 of 8 | Record 70 of 179 | Displaying records 51 - 75 of 179

Claims | Key Content | Fulltext | Legal Status | Timeline (beta)

Date	Code	Action
20020404	WO/AL [ADM;POS]	MD RU TJ TM AT BE CH CY DE DK ES FI FR GB GR IE IT LU MC NL PT SE TR BF BJ CF CG CI CM GA GN GQ GW ML MR NE SN TD TG
20020404	WO/A3 [EXM;POS]	International search report WO200208876 A3 20020404 [WO200208876]
20020530	WO/DFPE [EXM]	REQUEST FOR PRELIMINARY EXAMINATION FILED PRIOR TO EXPIRATION OF 19TH MONTH FROM PRIORITY DATE (PCT APPLICATION FILED BEFORE 20040101)
20030102	WO/REG; DE/8642 [EN	REFERENCE TO NATIONAL CODE DE: IMPACT ABOLISHED FOR DE - I.E. PCT APPL. NOT ENT. GERMAN PHASE DE: WIRKUNG WEGGEFALLEN FUER DE Corresponding cc: DE
20030903	WO/32PN [ADM;NEG]	EP: PUBLIC NOTIFICATION UNDER RULE 80 EPC, NOTIFIED IN THE EP BULLETIN COMMUNICATON PURSUANT TO RULE 69(1) EPC
20031105	WO/122 [ENP;NEG]	EP: PCT APP. NOT ENT. EUROP. PHASE
20050606	WO/NENP [RLW]	NON-ENTRY INTO THE NATIONAL PHASE IN:Corresponding cc: JP
AU7562701 A		
		Legal Status N/A
Dead: US2002030965 A1, US6594142 B2		
20010508	US/API [EXM;POS]	FILING DETAILS US85015801 20010508 [2001US-0850158]
20020314	US/A1 [EXM;POS]	First published patent application US2002030965 A1 20020314 [US20020030965]
20030715	US/B2 [PIF;POS]	Granted patent as second publication US6594142 B2 20030715 [US6594142]
20070904	US/FP-A [NEG;NIF]	EXPIRED DUE TO FAILURE TO PAY MAINTENANCE FEEEFFECTIVE DATE: 20070715
Dead: CA2366636 A1		
20020104	CA/API [EXM;POS]	FILING DETAILS CA2366636 20020104 [2002CA-2366636]
20021108	CA/A1 [EXM;POS]	Application laid open CA2366636 A1 20021108 [CA2366636]
20070104	CA/FZDE-A [NEG;NIF]	DEAD
Dead: US2002191999 A1, US6679639 B2		
20020626	US/API [EXM;POS]	FILING DETAILS US17916902 20020626 [2002US-0179169]
		First published patent application

Visualização do "Legal Status" para cada família de patentes: Modo Textual

Done | Internet | 100%

Ex. Questel Orbit

Orbit.com | Display | Add to | Export | Top | Citations | Translate | Compare | Save | Alert | Logout

Menu

179 results for ((collapsible)/BI/SA AND (keyboard)/BI/SA)

Claims | Key Content | Fulltext | Legal Status | Timeline (beta)

- Searches
  - General search
  - Number search
  - Citation search
- My Session
  - Search history
  - Search results
  - Cost estimator
- Past Sessions
  - Previous History
- My Searches
  - My saved searches
  - My alerts
- My Lists New
  - Quicklist (0)

Select all results | Google | Sort by relevance

#	Title	Original or current assignee	Publ. number	Pr. Date
51.	Collapsible keyboard	CHANGSHU SUNREX TECHNOLOGY	US6547463	2002-01-16
52.	WIRELESS KEYBOARD FOR HAND-HELD COMPUTERS	POCKETOP COMP; POCKETOP COMPUTER	WO03060681	2002-01-04
53.	Collapsible keyboard	DARFON ELECTRONICS	US2003122690	2001-12-28
54.	COLLAPSIBLE PORTABLE COMMUNICATION TERMINAL	FDK	JP2003198664	2001-12-28
55.	MECHANISM FOR UNFOLDING AND FOLDING OF FOLDING KEYBOARDS OF PORTABLE COMPUTERS AND SIMILAR DEVICES	KORSAKOV GRIGORIJ	WO2004006077	2001-12-11
56.	Collapsible keyboard	LITE ON TECHNOLOGY	US2003063939	2001-09-28
57.	Collapsible keyboard	YAN HUEI SHIANG; YEN HUEY SHIANG	US2003048595	2001-09-10
58.	Foldable keyboard work platform and carrying case		US2003034263	2001-08-17
59.	Key switch	BEHAVIOR TECH COMPUTER	US2003029708	2001-08-10
60.	Collapsible keyboard	BEHAVIOR TECH COMPUTER	US2003030623	2001-08-10
61.	Collapsible/folding mini USB/MIDI keyboard controller		US2003019346	2001-07-27
62.	POP-UP ELECTRONIC EQUIPMENT ENCLOSURE	LAPDOME	WO02098763	2001-06-06
63.	COLLAPSIBLE PANEL FOR AN ELECTRONIC DEVICE	BORUCKI GREGORY C; CECCHI MARINO; QUINN BRIAN P	WO2004051618	2001-05-11
64.	Stroller with programmable information module	GERICO CHILDREN PRODUCTS; GRACO CHILDRENS PRODUCTS	US2003132612	2001-05-09
65.	Flat hanging computer	HEWLETT PACKARD; HEWLETT PACKARD DEVELOPMENT	US2002149905	2001-04-11
66.	Height-adjusting collapsible mechanism for a button key	DARFON ELECTRONICS	US2002148711	2001-04-11
67.	Portable computer stand for a laptop computer		US2002100398	2001-01-31
68.	Ergonomic furniture	FARIA SABRINA ANN; LAWRENCE R C	GB2369565	2000-12-04
69.	Collapsible computer mouse pad		US2002117588	2000-10-04
70.	FOLDING KEYBOARD FOR A PERSONAL DIGITAL ASSISTANT	KATZ MICHAEL; MICHAEL KATZ; POCKETOP COMPUTERS	WO200208877	2000-07-19
71.	Folding keyboard for a personal digital assistant	POCKETOP COMPUTERS	US2005025551	2000-07-19
72.	Method and system for web management	EGRAIL	EP1172734	2000-07-12
73.	Collapsible keyboard	DARFON ELECTRONICS	US2002003530	2000-07-05
74.	Collapsible keyboard	ACER; DARFON ELECTRONICS	US2002001498	2000-07-01
75.	Electronic device with collapsible display	IPG ELECTRONICS 503; PHILIPS	EP1193953	2000-06-30

Page 3 of 8 | Record 70 of 179 | Displaying records 51 - 75 of 179

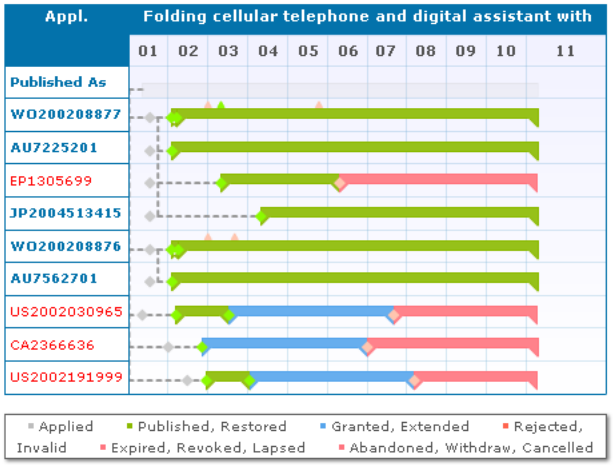

Visualização do “Legal Status” para cada família de patentes: Modo Gráfico - “Timeline”

Done | Internet | 100%

Ex. Questel Orbit

Buscas por citações por múltiplas famílias simultaneamente e em diversas categorias

Orbit.com | Display | Add to | Export | Top | Citations | Translate | Compare | Save | Alert | Analyse | Logout

Cited Patents
Citing Patents
Cited and citing Patents

In any categories
In category X
In category Y
In category X or Y

Menu

Search Patents...

- Searches
  - General search
  - Number search
  - Citation search
- My Session
  - Search history
  - Search results
  - Cost estimator
- Past Sessions
  - Previous History
  - Previous Analysis
- My Searches
  - My saved searches
  - My alerts
- My Lists New
  - Quicklist (0)

179 results for ((COLLAPSIBLE)/B

FAMPAT

Google | Sort by relevance

#	Title		Publ. number	Pr. Date
1.	Electromagnetic isolation chamber for accurately manipulating devices therein	ROLLAND STEPHEN	US2011031009	2009-08-04

(US20110031009)
An EMI shielded isolation chamber is provided, having an integral manipulator for manipulating electronic devices such as cell phones within the chamber, whereby a probe can be precisely positioned to selectively and directly actuate controls, switches, and keypads upon the devices anywhere in the chamber upon rotation of a probe tip. Extensible collapsible shielding boots are coupled between wall portions of the shielded chamber, adjacent a wall mounted manipulator support gimbal, and forward or rearward portions of the mechanical manipulator for preventing EMI signals from entering or leaving the shielded chamber. Alternatively, the gimbal constitutes the shielding device whereby a metallic hollow ball, slidably and rotatably supporting and containing the elongated manipulator, is mechanically biased snugly against a concave metallic member to block radiation from entering or leaving the shielded chamber. The probe tip is self-illuminated by an LED, thus providing illumination for the portion of the device being actuated.

2.	Bedtime Computer Table	TCHOLAKOV STAYKO	US2010300334	2009-05-29

(US20100300334)
A bedtime computer table allows one to comfortably use a laptop computer or other portable electronic devices while reclining in bed or sofa. The bedtime computer table consists of a flat panel to support a laptop computer and a mouse, a set of collapsible leg panels that support said panel and reciprocal locking fixtures that set members at fixed positions. The bedtime computer table can be in folded or unfolded position. The bedtime computer table has some of the following functions: a) Protects user from heat and absorbs heat from a laptop computer. b) Organizes one's usage of laptop computer, computer keyboard and a mouse while staying in bed or sofa. c) Alleviates weight pressure from user's lap

3.	HANDHELD ELECTRONIC DEVICE AND KEYBOARD HAVING MULTIPLE-FUNCTION KEYS	FYKE STEVEN HENRY	US2010271309	2004-02-24

(US20100271309)
An improved handheld electronic device having an improved keyboard provides enhanced usability with fewer keys by enabling the keys to pivot slightly to provide multiple functions to the keys. The improved keyboard may, for example, include internal strips of conductive carbon that are disposed adjacent the keys and are electrically engageable with contacts on a printed circuit board. Specifically, when a key is pressed directly downward it collapses a single dome and connects together a set of primary contacts to provide a first function. When the key is pressed at the side thereof, the key pivots slightly, collapses the dome and connects together the primary contacts, and also engages a carbon strip with a pair of secondary contacts to connect together the secondary contacts, all of which provide a second function. The keyboard may be configured to be of a QWERTY configuration while using only a relatively small number of keys.

4.	DETECTING KEY ACTUATION IN A KEYBOARD	OLODORT ROBERT; TANG JOHN; TURCHIK RANDY	US2010271310	1997-11-12

(US20100271310)
A system and method for detecting key actuation in a keyboard assembly, which, in one embodiment, is used as a conductor to electrically communicate with an information appliance. The rows in the keyboard assembly are electrically isolated from one another, and each row contains keys bridging a two-wire bus. Each key has a switch that is closed during key actuation, a diode to polarize the key, and a resistor to provide a resistive load when the switch is closed and the diode is biased with the current flow. Alternatively, each key has a switch that is closed during key actuation, a timer with an output that goes high after a predetermined time period, and a resistor that provides an identifying load when the switch is closed and the output of the timer is high. Other features of the invention include a linear matrix coupled to a row of keys to allow the row to be scanned by sections and individual keys, and a flexible circuit that provides the electrical pathways for the linear matrix.

Page 1 of 2 | Record 8 of 179

Key Content | Concepts | Fulltext | Legal Status | Citations

COLLAPSIBLE KEYBOARD

Published As

	Publ. number	Pub. date	Appl. number	Appl. date	Publ. Stage	Links
PCT	WO2009100607	20090820	2008WO-CN02107	20081229	A1 - In	
	CN201145884	20081105	2008CN-U003367	20080131	Y - Gri	

Cited Patents

	Publ. number	Pub. date	Original or current assignee	Cat.	#	Links

Title: Keyboard for computers has a hand support section that is hinged on to the main body and can be moved through an arc to act as a stand

DE20317278	20040115	CHERRY	Y	1

Document type: U1 - Utility model
Appl. number: 2003DE-2017278
Appl. date: 20031110

Title: Keyboard device with palmrest stored therein

US2001028548	20011011	ALPS ELECTRIC	A	1

Document type: A1 - First published patent application
Appl. number: 2001US-0814613
Appl. date: 20010322

No citing patent

Displaying records 1 - 100 of 179

Done | Internet | 100%

Ex. Questel Orbit

Visualização apenas de figuras representativas para cada família de patentes

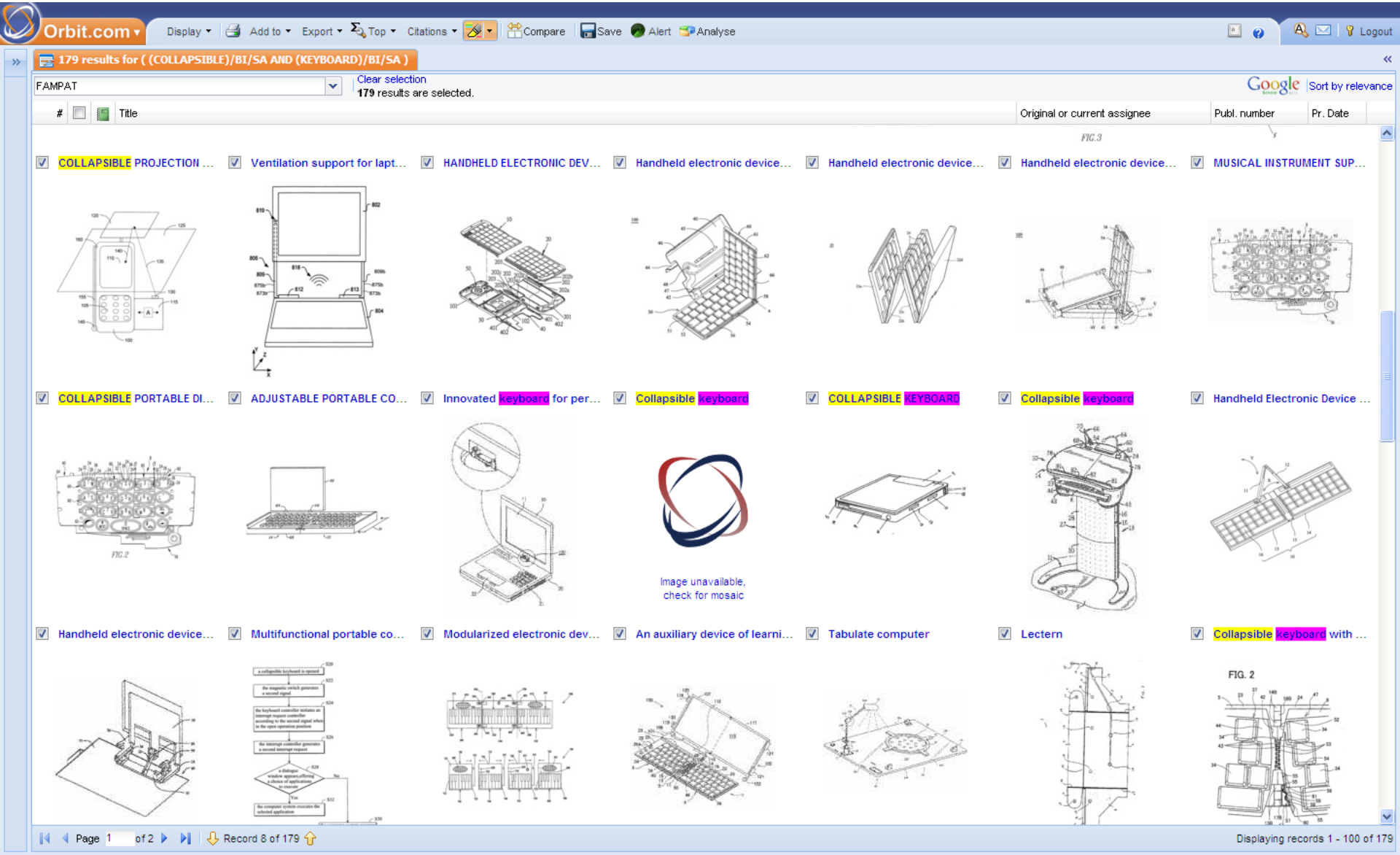

Ex. Questel Orbit

Cobertura Geográfica
(Publicações por Países)

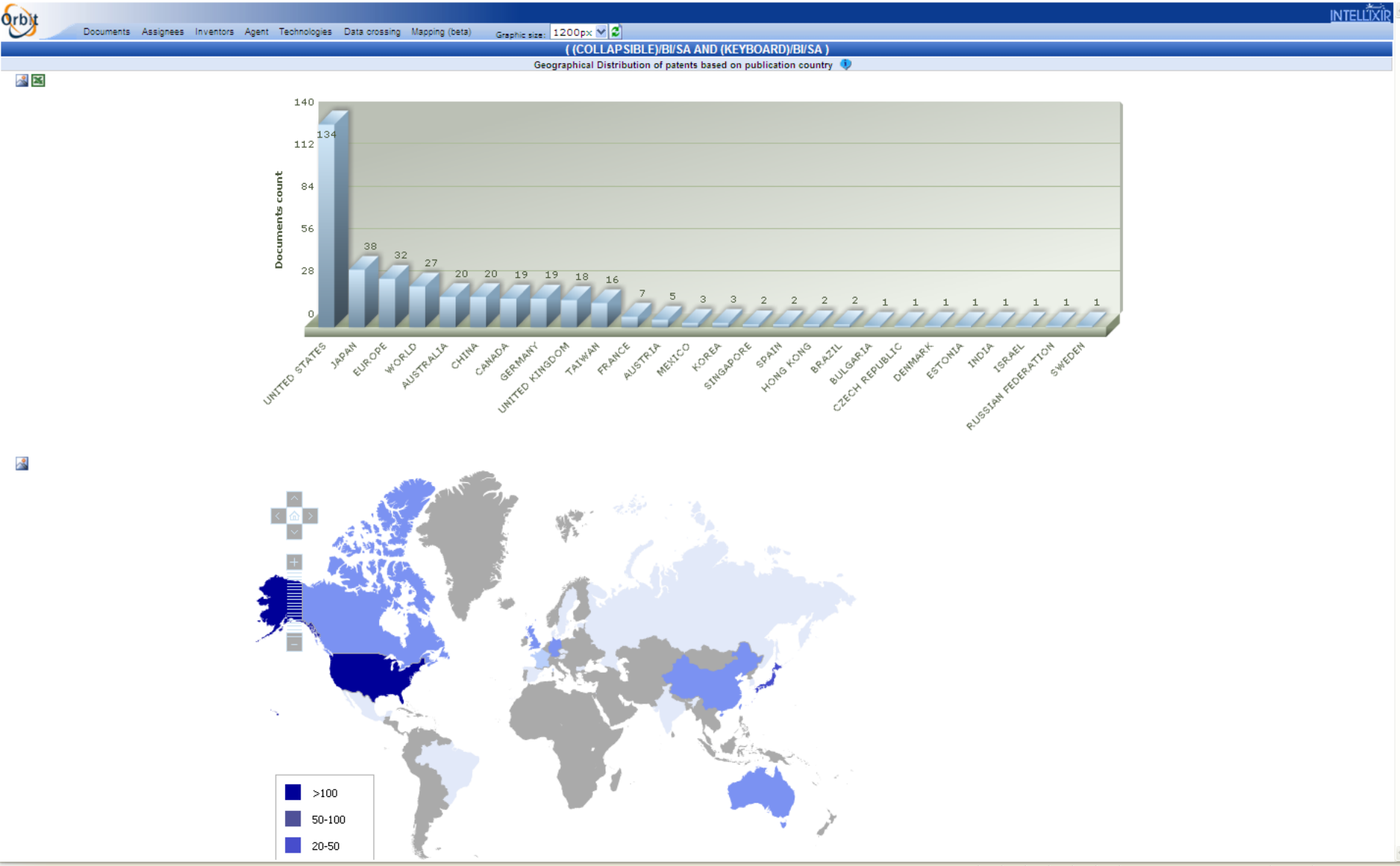

Ex. Questel Orbit

Cobertura Geográfica
Principais Depositantes

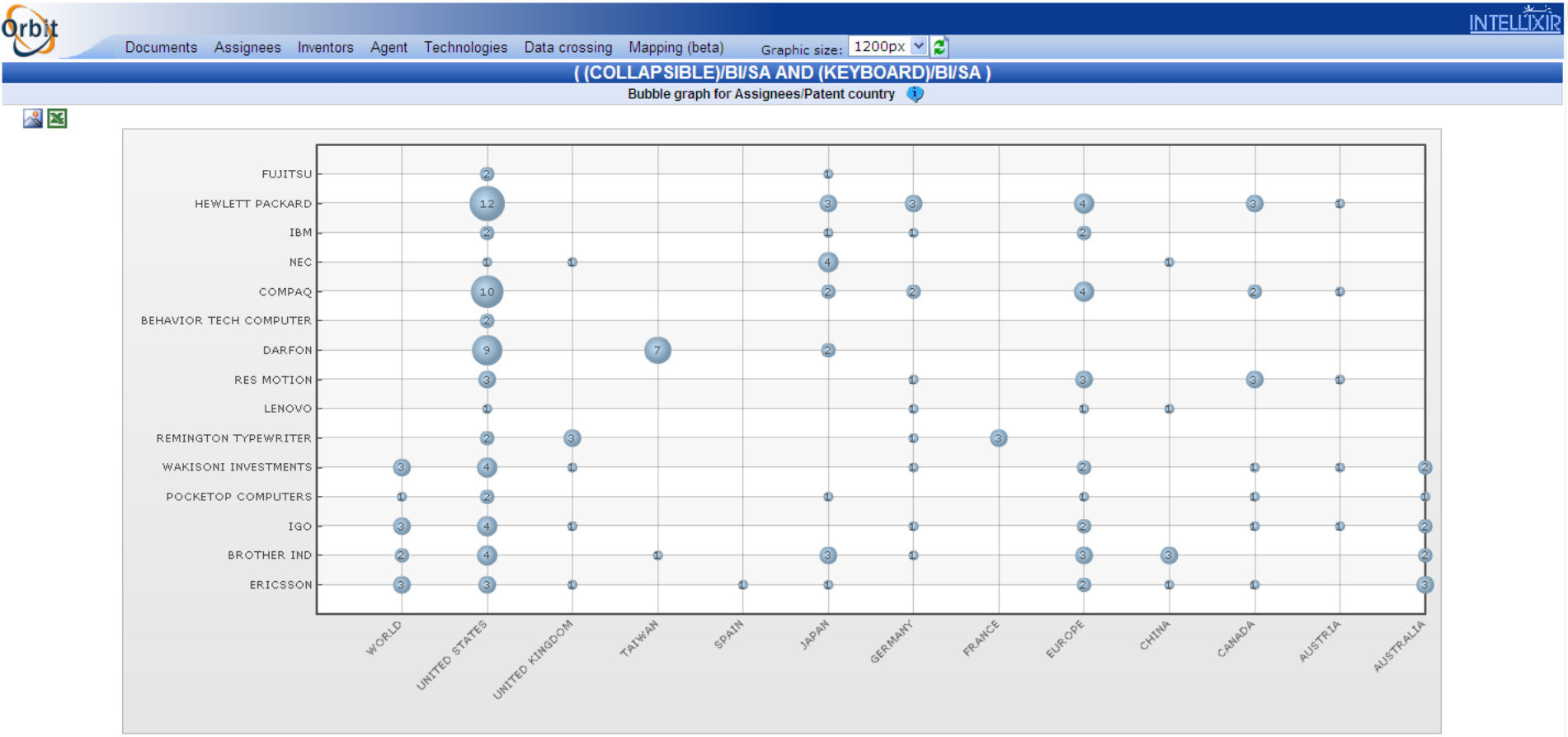

Ex. Questel Orbit

Evolução Temporal
Principais Depositantes

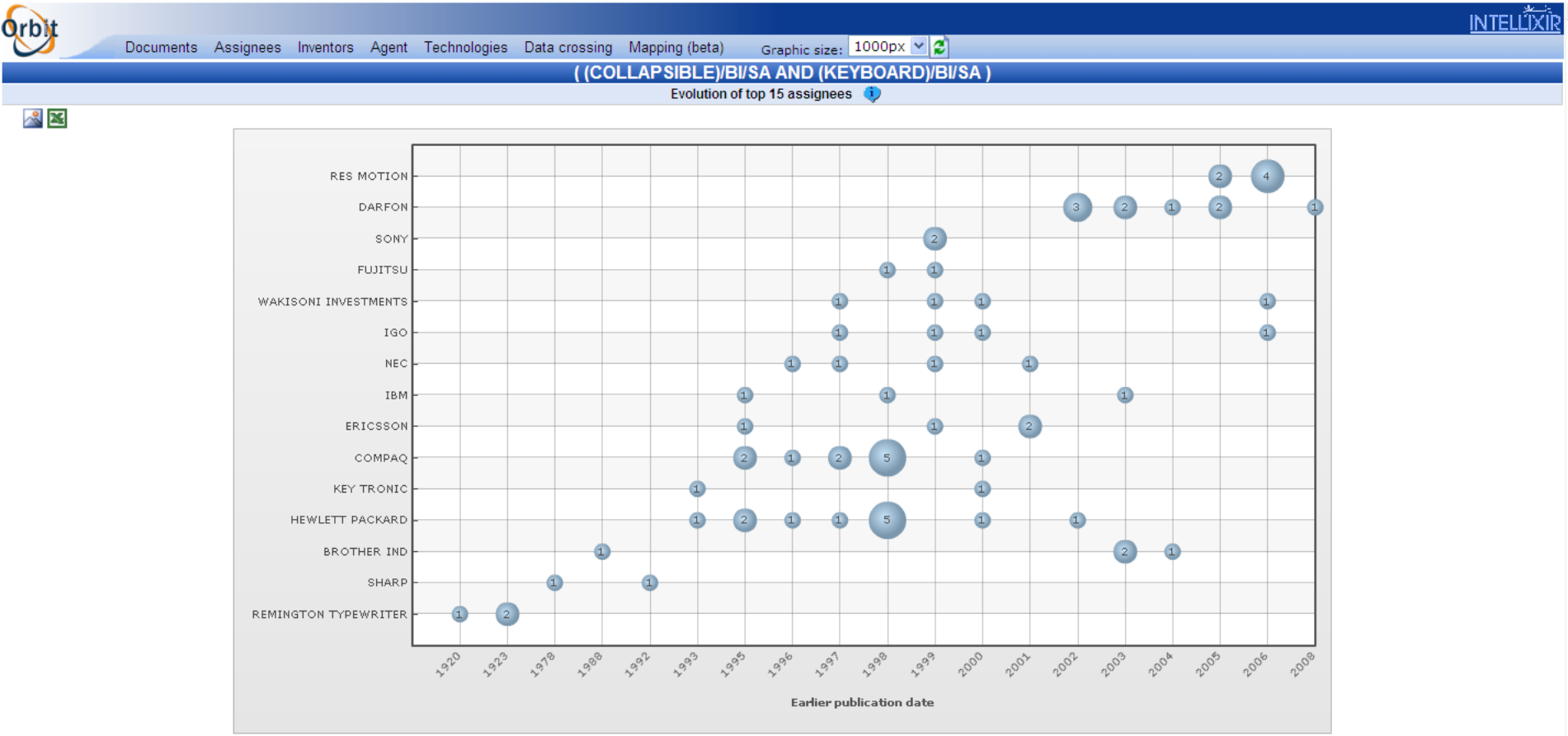

Ex. Questel Orbit

Mapa de Citações:
Titulares

Orbit INTELLIXIR

Documents Assignees Inventors Agent Technologies Data crossing Mapping (beta) Graphic size: 1000px

((COLLAPSIBLE)/BI/SA AND (KEYBOARD)/BI/SA)

Citations map

Category: All OK

Zoom

Coocurrences 1 Min Occurrences 1 Min

Duration 11 years End date 2006 Update Reset

Min citing 0 Min cited 0

HARMONIC RESEA
MITAC
CANON
SHINKI KAGI KOFU
PANG LEOW HIEW
HOWARD ROBERT
RAOUL PARIENTI
POLAROID
SHARP
POCKETOP COMP
EMIRIO AMUBASU
PATENT CATEGOR
G U I WORKS
IBM LENOVO
EGRAIL
DAFANG ELECTRO
BUBAR PAUL TR...
BROTHER IND
DARFON
DELL
KIA MOTORS
TEXAS INSTRUME
SMALL SYSTEMS
SILVERBOOK RES
POCKETOP COMP
WAKISONI INVEST
POCKETOP COMP
MORGAN GUARAN
THINK OUTSIDE
MICHAEL KATZ
COMPAQ HP
LITE ON TECHNOL
APPLE
IGO

DARFON
BROTHER IND
THINK OUTSIDE
IGO
BUBAR PAUL TR... FAMILY TRUST
RAOUL PARIENTI
WILSON L CHIU
ERICSSON
POCKETOP COMPUTERS
DAFANG ELECTRONICS
MICHAEL KATZ
POCKETOP COMPUTER
SHARP
APPLE
HOWARD ROBERT
MORGAN GUARANTY TRUST
POCKETOP COMP
SMALL SYSTEMS DESIGN
POLAROID
LITE ON TECHNOLOGY
HARMONIC RESEARCH
TEXAS INSTRUMENTS
MITAC
COMPAQ HP
COMPAQ HP (13)
SILVERBOOK RESEARCH
PANG LEOW HIEW
DELL
SILVER BROOK RESEARCH
WAKISONI INVESTMENTS
SILVERBROOK
SHINKI KAGI KOFUN YUGENKOSHI
KIA MOTORS
CANON
EGRAIL
PATENT CATEGORY
IBM LENOVO
G U I WORKS
EMIRIO AMUBASU

Error on page. Internet 100%

Ex. Questel Orbit

Exportação para TXT, PDF, RTF, XLS, CSV, XML e Email. Exportação para VantagePoint, Intelixir, Bizint

Orbit.com | Display | Add to | Export | Top | Citations | Translate | Compare | Save | Alert | Analyse | Logout

Menu

Search Patents...

- Searches
  - General search
  - Number search
  - Citation search
- My Session
  - Search history
  - Search results
  - Cost estimator
- Past Sessions
  - Previous History
  - Previous Analysis
- My Searches
  - My saved searches
  - My alerts
- My Lists New
  - Quicklist (0)

Export
- Export as TXT
- Export as PDF
- Export as RTF
- Export as XLS
- Export as CSV
- Export as XML
- Email (permalinks)
- Bizint Export
- VantagePoint Export
- Export Intellixir
- My export profiles
- 1 PDF First Page + Key Cont ...
- 2 RTF First Page + Key Cont ...
- 3 XLS Resumido

179 results for ((

Select all families, Clear se

25 families are selected.

#	Title	Original or current assignee	Publ. number	Pr. Date
1.	Computer s alternate di method the	MITAC TECHNOLOGY; SHINKI KAGI K...	US2004093449	2002-11-12
2.	Foldable ke	BROTHER INDUSTRIES	WO03104962	2002-06-04
3.	Collapsible	DARFON ELECTRONICS	US2003122690	2001-12-28
4.	Collapsible a computer		US6256017	1994-02-24
5.	Collapsible	DAFANG ELECTRONICS; DARFON EL...	US2005224320	2004-04-09
6.	Collapsible	DARFON ELECTRONICS	US2005258021	2004-05-21
7.	Collapsible	DARFON ELECTRONICS	US2003197628	2002-04-17
8.	Collapsible	IGO; WAKISONI INVESTMENTS	WO9843156	1997-03-21
9.	Collapsible	DARFON ELECTRONICS	US2002003530	2000-07-05
10.	Collapsible keyboard structure for a notebook computer	COMPAQ COMPUTER; COMPAQ INFO...	EP0691601	1994-06-30
11.	Foldable keyboard	BROTHER INDUSTRIES	WO03104961	2002-06-04
12.	Collapsible keyboard	BEHAVIOR TECHNOLOGY COMPUTER	US2003030623	2001-08-10
13.	Collapsible keyboard with supporting structure	DARFON ELECTRONICS	US2004175220	2003-03-07
14.	Collapsible keyboard	LITE ON TECHNOLOGY	US2003063939	2001-09-28
15.	Collapsible keyboard	DARFON ELECTRONICS	US2008173529	2004-04-09
16.	Collapsible keyboard/pointing stick structure	COMPAQ INFORMATION TECHNOLOG...	US5786806	1996-03-29
17.	Compact notebook computer having a foldable and collapsible keyboard structure	COMPAQ COMPUTER; COMPAQ INFO...	EP0691603	1994-06-30
18.	Collapsible keyboard	APPLE	US5163765	1992-03-04
19.	Collapsible keyboard mechanism with integrated lcd display	COMPAQ INFORMATION TECHNOLOG...	US6137676	1998-05-22
20.	Collapsible keyboard	IGO; SMALL SYSTEMS DESIGN; WAKI...	WO9924963	1997-11-12
21.	Double spring collapsible keyboard structure for a notebook computer, responsive to opening and closing of the computer's lid via relatively shiftable key support structure and shift member	COMPAQ INFORMATION TECHNOLOG...	US5677826	1994-06-30
22.	Collapsible musical keyboard	BUBAR PAUL TRUSTEE OF THE DAVI...	US2004083877	2002-10-30
23.	Collapsible keyboard stand	ULTIMATE SUPPORT SYSTEMS	US4770380	1987-06-22

Page 1 of 8 | Record 5 of 179 | Displaying records 1 - 25 of 179

Preview | Drawings | Key Content | Legal Status | Citations

Collapsible keyboard

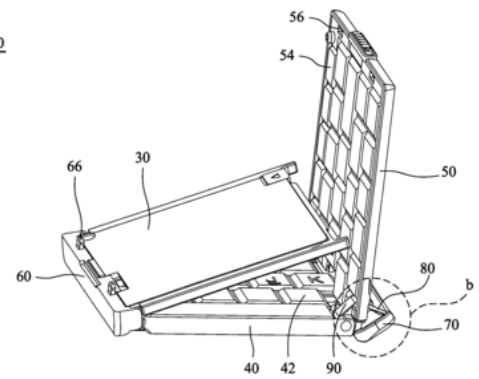

AB
(US20050224320)
A collapsible keyboard comprises a first key assembly, a second key assembly rotatably connected to the first key assembly and a third key assembly rotatably connected to the second key assembly. The first key assembly is located between the second and third key assemblies when the collapsible keyboard is in a collapsed mode, and the first key assembly, the second and third key assemblies are substantially located on the same level when the collapsible keyboard is in an operating mode.

IN	HSU CHIEN-SHIH
PA	DAFANG ELECTRONICS DARFON ELECTRONICS
PAH	(US20050224320) HSU CHIEN SHIH; FROM 20050317 TO 20050317 DARFON ELECTRONICS; FROM 20050317 (JP2005302016) (A) DAFANG ELECTRONICS CO LTD (TW-228739) (B) DARFON ELECTRONICS CORP (TW) (A) DARFON ELECTRONICS CORP
PA0	Darfon Electronics Corporation, Taoyuan [TW]
RP	(US20050224320) (A1) QUINTERO LAW OFFICE; 1617 BROADWAY, 3RD FLOOR, SANTA MONICA, CA, 90404[US] (B2) Quintero Law Office

Done | Internet | 100%

Ex. Questel Orbit

Exportação de múltiplos campos, incluindo imagens, reivindicações, famílias de patentes, etc.

Orbit.com

Display | Add to | Export | Top | Citations | Logout

Menu

Search Patents...

- Searches
  - General search
  - Number search
  - Citation search
- My Session
  - Search history
  - Search results
  - Cost estimator
- Past Sessions
  - Previous History
  - Previous Analysis
- My Searches
  - My saved searches
  - My alerts
- My Lists New
  - Quicklist (0)

179 results for ((COLLAPSIBLE)/BI/SA AND (K

FAMPAT

| Title

1. Electromagnetic isolation chamber for a manipulating devices therein

(US20110031009)
An EMI shielded isolation chamber is provided, having a phones within the chamber, whereby a probe can be pr and keypads upon the devices anywhere in the chamb wall portions of the shielded chamber, adjacent a wall manipulator for preventing EMI signals from entering or le a metallic hollow ball, slidably and rotatably supporting metallic member to block radiation from entering or leavin for the portion of the device being actuated.

2. Bedtime Computer Table

(US20100300334)
A bedtime computer table allows one to comfortably use bed or sofa. The bedtime computer table consists of a fl leg panels that support said panel and reciprocal locking unfolded position. The bedtime computer table has sor computer. b) Organizes one's usage of laptop computer, from user's lap

3. HANDHELD ELECTRONIC DEVICE AND KEY HAVING MULTIPLE-FUNCTION KEYS

(US20100271309)
An improved handheld electronic device having an im enabling the keys to pivot slightly to provide multiple fun internal strips of conductive carbon that are disposed Specifically, when a key is pressed directly downward function. When the key is pressed at the side thereof, th engages a carbon strip with a pair of secondary contac keyboard may be configured to be of a QWERTY config

4. DETECTING KEY ACTUATION IN A KEYBOA

(US20100271310)
A system and method for detecting key actuation in a keyboard assembly, which, in one embodiment, is used as a conductor to electrically communicate with an information appliance. The rows in the keyboard assembly are electrically isolated from one another, and each row contains keys bridging a two-wire bus. Each key has a switch that is closed during key actuation, a diode to polarize the ke and a resistor to provide a resistive load when the switch is closed and the diode is biased with the current flow. Alternatively, each key has a swit that is closed during key actuation, a timer with an output that goes high after a predetermined time period, and a resistor that provides an identify load when the switch is closed and the output of the timer is high. Other features of the invention include a linear matrix coupled to a row of keys allow the row to be scanned by sections and individual keys, and a flexible circuit that provides the electrical pathways for the linear matrix.

Image unavailab check for mosa

5. (U3) Collapsible keyboard JP3092668 2002-09-09

(JP3092668U)
A collapsible keyboard includes a middle subframe, and right and left subframes respectively disposed at and connected to two sides of the middle subframe by two levers, each of which is pivotally mounted on each pair of the adjacent subframes. Thus, the right and left subframes are swingable relative to the middle subframe between a deployed position, where the subframes are aligned w

Image unavailab check for mosa

Page 1 of 2 | Record 1 of 179 | Displaying records 1 - 100 of 179

Export — Template options

Choose how data will be formatted in output file

XLS

Template

- Classical
- Kwic

Patent number format: Short

Data

- Complete
- Custom Edit

With:

- [x] Images
- [ ] Full name for columns header
- [ ] One member per line
- [ ] Representative member only

< Back | Next > | Finish | Cancel

Export — Fields selection

Select information to export.

Select : All, None

- [ ] FamPat Family Accession Number
- [ ] FamPat Family Numbers and Dates
- [ ] Publication Number Only
- [ ] English Title - Native or Translation
- [ ] Title - Other Languages
- [ ] Priority Numbers and Dates
- [ ] Oldest Priority Date
- [ ] Inventor(s)
- [ ] Assignee(s)
- [ ] International Classification
- [ ] European Classification
- [ ] US Classification
- [ ] Japanese Classification
- [ ] English Abstract - Native or Official Trans.
- [ ] English Abstract - Machine Translation
- [ ] Abstract - Other Languages
- [ ] Designated States
- [ ] Key Info
- [x] Description
- [x] Claims
- [ ] Patent and Non-Patent Literature Citations
- [ ] Cited Patent Number Only
- [ ] Legal Status
- [ ] Other:

Ok | Cancel

Done | Internet | 100%

Ex. Questel Orbit

Exportação de múltiplos campos, incluindo imagens, reivindicações, famílias de patentes, etc.

Microsoft Excel - Exemplo Relatório XLS

D2: Computer system with collapsible keyboard and alternate display functions and processing method thereof

	A	B	C	D	E	F	G	H
1	IMAGE	FAN	XPN	TI	PA	IC	AB	ECLM
2		20090111710856	US7054973; US20040093449 DE10331550 JP2004164544 TW200407784	Computer system with **collapsible keyboard** and alternate display functions and processing method thereof	MITAC TECHNOLOGY SHINKI KAGI KOFUN YUGENKOSHI	G06F-001/16 G06F-001/18 G06F-003/02 G06F-003/023 G06F-009/44 G06F-013/00 G06F-013/20 G06F-013/24	(US20040093449) A computer system with **collapsible keyboard** and alternate display functions. The computer system includes a main body which stores at least one application. A monitor and **collapsible keyboard** are coupled to the main body, the **keyboard** disposable in an open operating position and a folded position. A signal generating device is coupled to both the **collapsible keyboard** and the main body to generate a first	(US7054973) What is claimed is: 1. A computer system, comprising a main body for storing at least an application; a monitor coupled to the main body;a keyboard coupled to the main body, disposable in at least an open operating position and a folded position, wherein, when disposed in the folded position, the keyboard covers a first partial area of the monitor and leaves uncovered a second
3	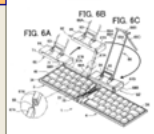	20090111304584	WO2003104962 EP1510910 US20050105952 JP2004021416 JP2004013354 JP2004013343 JP2004013342 JP2004013340 JP2004013336 CN1656436 AU2003241978	FOLDABLE **KEYBOARD**	BROTHER INDUSTRIES	B41J-005/08 G06F-001/16 G06F-003/02 G06F-015/02	(WO2003104962) A control section (62) is provided independent of a **keyboard** (1), and the control section (62) and a first **keyboard** unit (3) are connected to each other by an adjustable arm (67). The control section (62) can be placed at substantially the center position of the **keyboard** (1) because of the adjustable characteristics of the adjustable arm (67). This enables PDA73 connected to a connection member (64) of the control section (62) to be	(EP1510910) 1. A foldable keyboard in which a rotational connecting part is provided between a first keyboard unit in which a plurality of key switches to be operated for a left hand are arranged and a second keyboard unit in which a plurality of key switches to be operated for a right hand are arranged so that both units are rotated about the rotational connecting part in a direction to come apart from each other into a horizontally arranged state
4	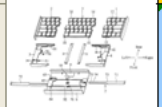	20090110916458	US6950038; US20030122690 TW-534390U	**Collapsible keyboard**	DARFON ELECTRONICS	G06F-003/02 G06F-003/023 H03K-017/94 H03M-011/00	(US20030122690) A **collapsible keyboard**. The **collapsible keyboard** includes a **keyboard** chassis, a right track frame, a right key set and a main key set. The right track frame is disposed on the **keyboard** chassis and slides rightward and leftward. The right track frame has a first sloped sliding groove. The left portion of the first sloped sliding groove is higher than the right portion of the first sloped sliding groove is higher than the right portion of the first sloped sliding groove. The right key set is connected to	(US6950038) 1. A collapsible keyboard, comprising: a keyboard chassis; a right track frame slidably disposed on the keyboard chassis and sliding rightward and leftward, the right track frame having a first sloped sliding groove, wherein the left portion of the first sloped sliding groove is higher than the right portion of the first sloped sliding groove; a right key set movably connected to the right track frame, the right key set driving the right track frame move
5	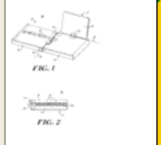	20090090073237	US6256017	**Collapsible keyboard** and display mechanism for a computer system		G06F-001/16 G06F-003/02 G09G-005/00	(US6256017) A **collapsible keyboard** and display mechanism for a computer system includes a **collapsible keyboard** having at least two independent **keyboard** sections and a first hinge device for enabling at least two of the **keyboard** sections to fold together in face to face relationship; and an independent display section disposed between the two **keyboard** sections in the collapsed condition	(US6256017) What is claimed is: 1. A collapsible keyboard and display mechanism for a computer system comprising: a) A collapsible keyboard housing having at least two keyboard sections, said housing having a first hinge for enabling two of said keyboard sections to fold together in a face to face relationship, each of said keyboard sections having a
6	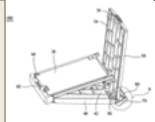	20090120271268	US7375295; US20050224320 JP2005302016 TW-228739; TW200534314	**Collapsible keyboard**	DAFANG ELECTRONICS DARFON ELECTRONICS	G06F-001/16 G06F-003/00 G06F-003/02 H01H-003/00 H01H-009/00 H01H-009/20 H01H-009/26 H01H-013/70	(US20050224320) A **collapsible keyboard** comprises a first key assembly, a second key assembly rotatably connected to the first key assembly and a third key assembly rotatably connected to the second key assembly. The first key assembly is located between the second and third key assemblies when the **collapsible keyboard** is in a collapsed mode, and the first key assembly, the second and third key assemblies are substantially located on the	(US7375295) What is claimed is: 1. A collapsible keyboard, comprising: a first key assembly; a second key assembly rotatably connected to the first key assembly;a third key assembly rotatably connected to the second key assembly, wherein the first key assembly is located between the second and third key assemblies when the collapsible keyboard is in a collapsed mode, and the first key
7	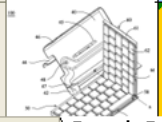	20090120378246	US7153050; US20050258021 JP3112517U TW200539001	**Collapsible keyboard**	DARFON ELECTRONICS	B41J-011/00 B41J-011/56 B41J-029/06 G06F-003/02 H01H-009/00	(US20050258021) A **collapsible keyboard** comprises a connection part, a top cover pivoted to the connection part, a first key assembly connected to the connection part and movable between a first position and a second position, and a second key assembly pivoted to the first key assembly. The first key assembly is	(US7153050) What is claimed is: 1. A collapsible keyboard, comprising: a connection part comprising a hook; a top cover pivoted to the connection part;a first key assembly connected to the connection part and movable between a first position and a second position: and

Exemplo Relatório XLS

Pronto

start | orbit.com - Windows ... | Microsoft PowerPoint ... | 201103 Questel Orbit | 02b741e9-28e3-42b9... | Microsoft Excel - Exe... | Links | 23:21

Ex. Questel Orbit

Pocket tool

US20050081302

- **Patent Assignee**
  VICTOLINORKS
  VICTORINOX
- **Inventor**
  ELSENER CARL
- **International Patent Classification**
  A61C-015/00;A61C-015/02;B25F;B25F-001/00;B25F-001/04;B26B;B26B-001/00;B26B-001/04;B26B-011/00;B26B-013/00;B26B-013/22;G06F;G06F-001/00;G06F-003/00;G06F-013/00;G06K-019/04;G06K-019/077;G11C;G11C-016/00
- **US Patent Classification**
  007118000;007170000

- **Publication Information**
  US20050081302 A1 20050421 [US20050081302]
- **Priority Details**
  2003AT-0001650 20031017
  2004AT-0001579 20040921

- **Fampat family**

DE102004048116	B4	20111208	[DE102004048116]
AT500428	B1	20110815	[AT-500428]
CN101890728	A	20101124	[CN101890728]
HK1073625	A1	20101119	[HK1073625]
FR2891179	B1	20100730	[FR2891179]
CH700252	B1	20100730	[CH-700252]
CN1628940	B	20100609	[CN1628940B]
FR2861007	B1	20090522	[FR2861007]
TWI301790	B	20081011	[TW-301790]
GB2407056	B	20070912	[GB2407056]
AT500097	B9	20070815	[AT-500097]
AT500097	B1	20070715	[AT-500097]
FR2891179	A1	20070330	[FR2891179]
US7146667	B2	20061212	[US7146667]
AT500428	A1	20051215	[AT-500428]
AT500097	A1	20051015	[AT-500097]
TW200529993	A	20050916	[TW200529993]
CN1628940	A	20050622	[CN1628940]
DE102004048116	A1	20050512	[DE102004048116]
FR2861007	A1	20050422	[FR2861007]
US2005081302	A1	20050421	[US200500813 02]
KR20050037399	A	20050421	[KR200500373 99]
GB2407056	A	20050420	[GB2407056]
GB0422725	D0	20041117	[GB200422725]

- **Abstract:**
  (US20050081302)
  The invention specifies a pocket tool, particularly a pocket knife (1) or plate-like tool card, comprising a housing (2) with at least one receiving area (10), and at least two functional components (11) movable from a storage position within the receiving area (10), into a working position outside of the receiving area (10). The first functional component (11) is designed as a tool, particularly a pair of scissors (16) or knife (1). The second functional component (11) has a support casing (25) and is equipped with a recordable and readable, nonvolatile memory, as well as with an interface (24). A releasable locking device and a longitudinal guide or pivot bearing are arranged between the support casing (25) of the second functional component (11) and the housing (2).

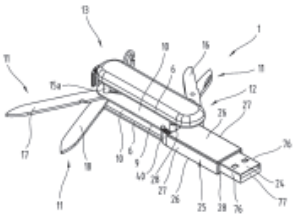

© Questel

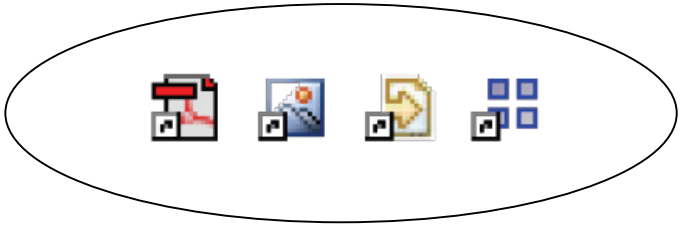

Arquivos exportáveis com famílias de patentes, incluindo hiperlinks para textos integrais, imagens e citações (mesmo para não assinantes)

Pesquisa de Patentes

Agregadores

- Dialog (www.dialog.com) *
- Questel (www.questel.com)
- STN (www.stn-international.de) *
- Lexis Nexis (www.lexisnexis.com)
- Etc...

© 2016 www.axonal.com.br

Pesquisa de Patentes

Meta- Agregadores

- Landon IP, Inc (www.landon-ip.com)
- Cardinal IP, LLC (www.cardinal-ip.com)
- Nerac, Inc (www.nerac.com)
- CPA Global (www.cpaglobal.com)
- Etc…

© 2016 www.axonal.com.br

Uso Estratégico de Propriedade Intelectual e Informações Tecnológicas

Foco no Setor Farmacêutico

- Agenda

  - Propriedade Intelectual no contexto farmacêutico, com destaque a patentes

  - Uso estratégico de patentes e informações patentárias

  - Ferramentas e técnicas de busca e análise de informações tecnológicas

  - Fontes, sistemas de busca e análise de informações com foco na área farmacêutica

  - Exemplo de mapeamento de segmento tecnológico

© 2016 www.axonal.com.br

Uso Estratégico de Patentes & Informações Tecnológicas em Projetos de P&D

FIOCRUZ - Rio de Janeiro, RJ

29 de abril de 2013

© 2013 www.axonal.com.br

AXONAL.

Exemplo

Vacinas contra Febre Amarela e outros Flavivírus.

- Em relação a patentes de terceiros...
- Em relação a notificações de estudos clínicos...
- Em relação a publicações técnicas...
- Em relação a informações sobre esforços de P&D de terceiros...
- Em relação a notícias...
- Em relação a opiniões de experts...

© 2013 www.axonal.com.br

AXONAL.

Em relação a patentes de terceiros...

© 2013 www.axonal.com.br

Febre Amarela maiores depositantes

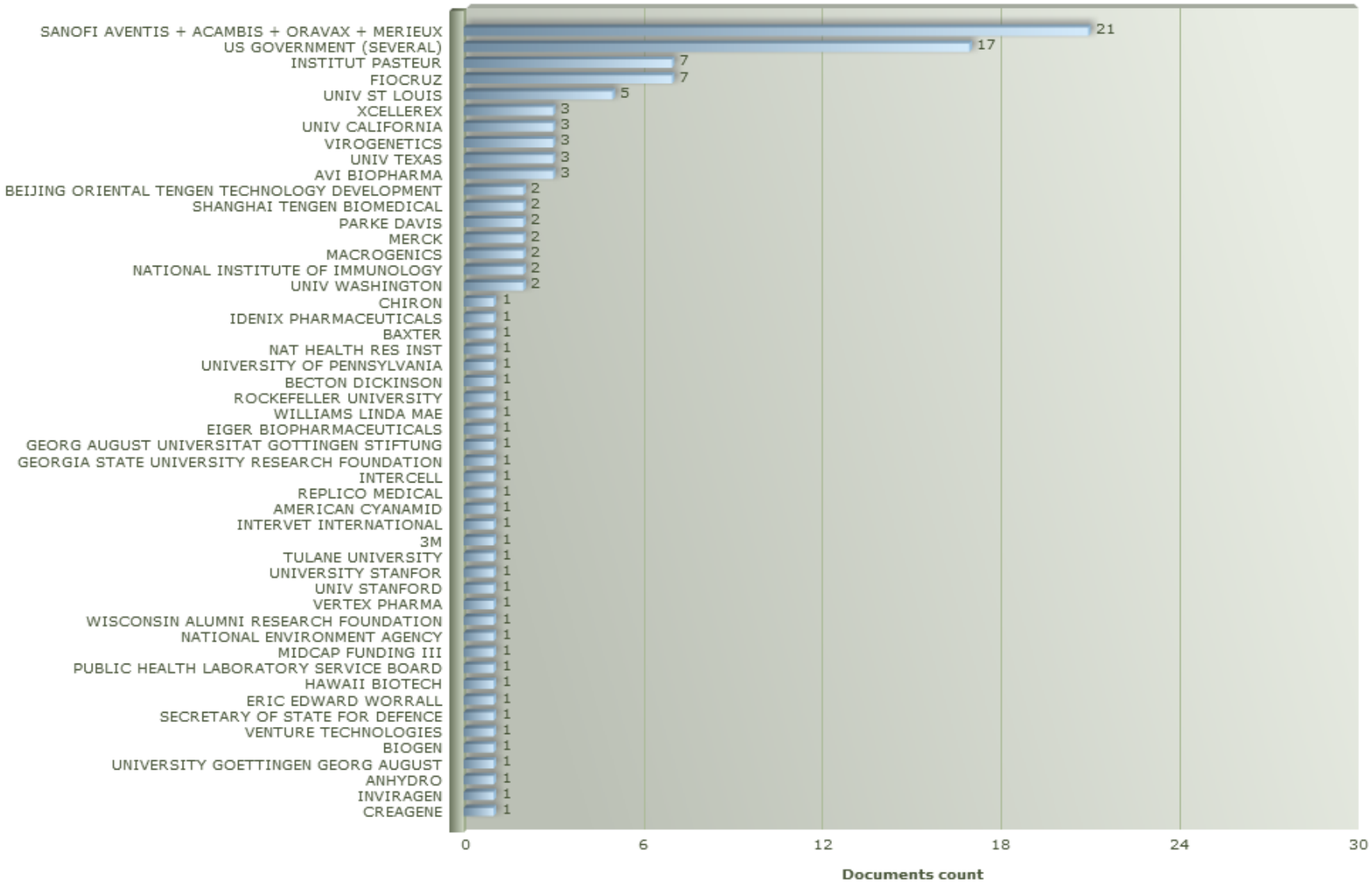

Febre Amarela maiores depositantes evolução temporal

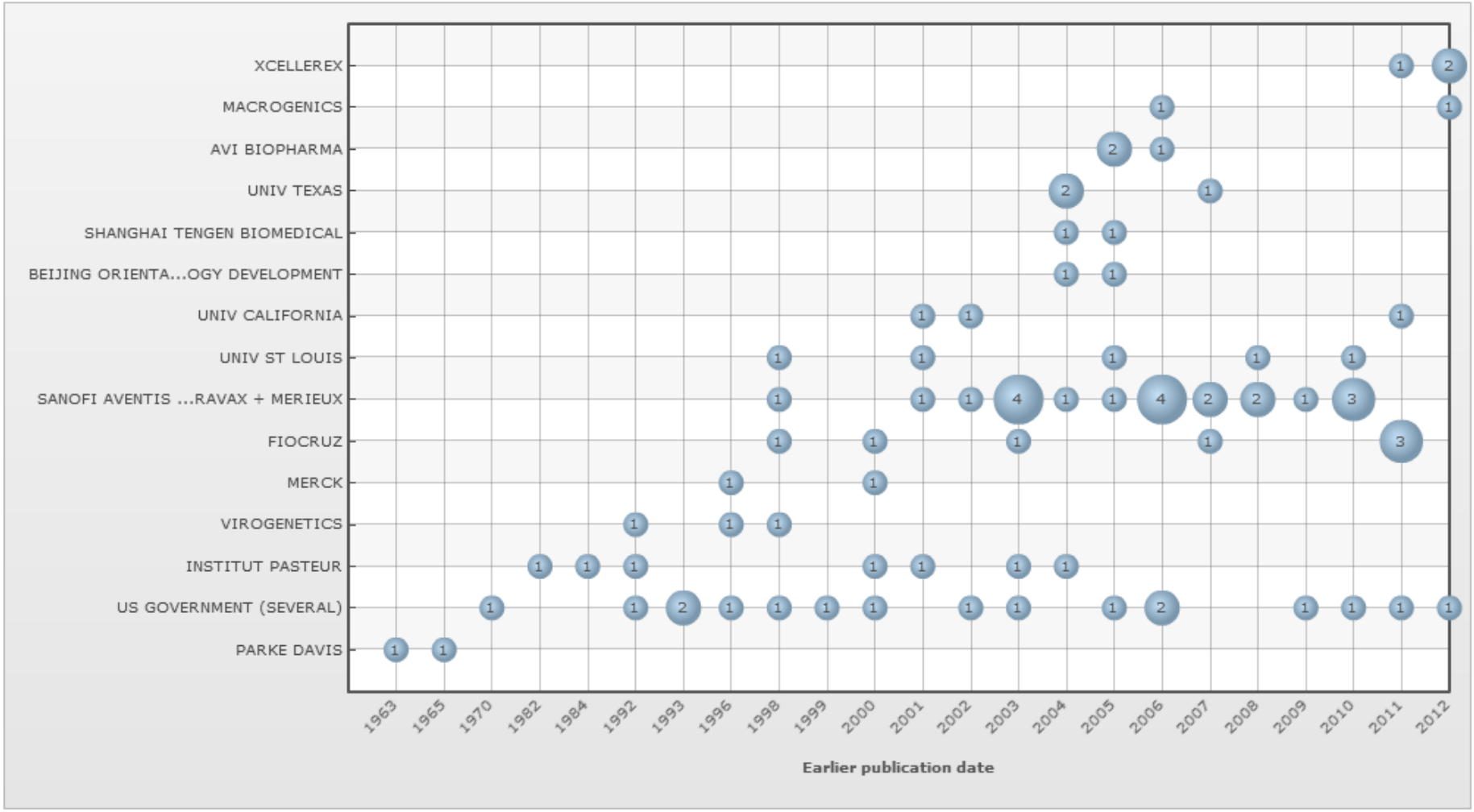

Febre Amarela maiores depositantes cobertura geográfica

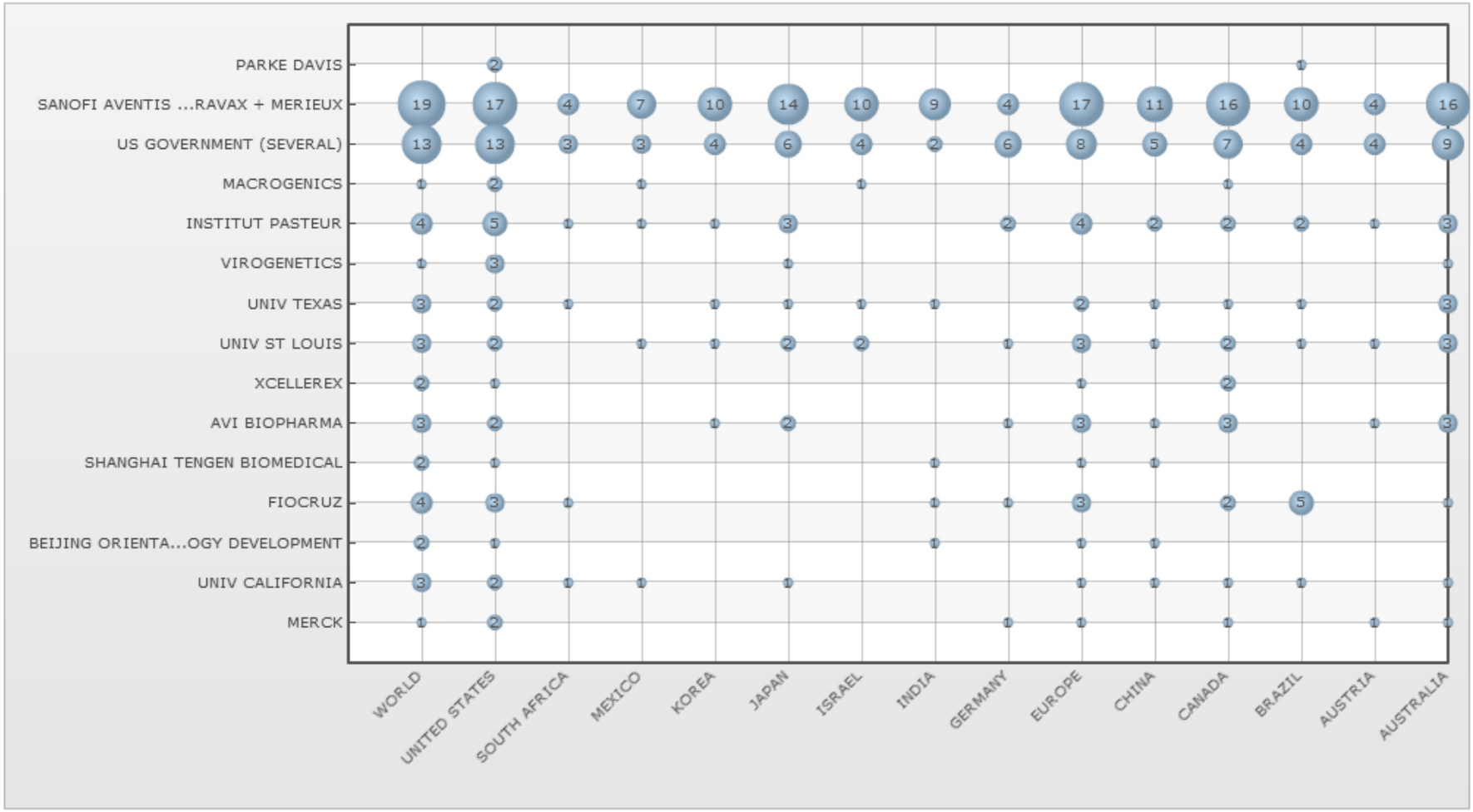

Flavivirus maiores depositantes

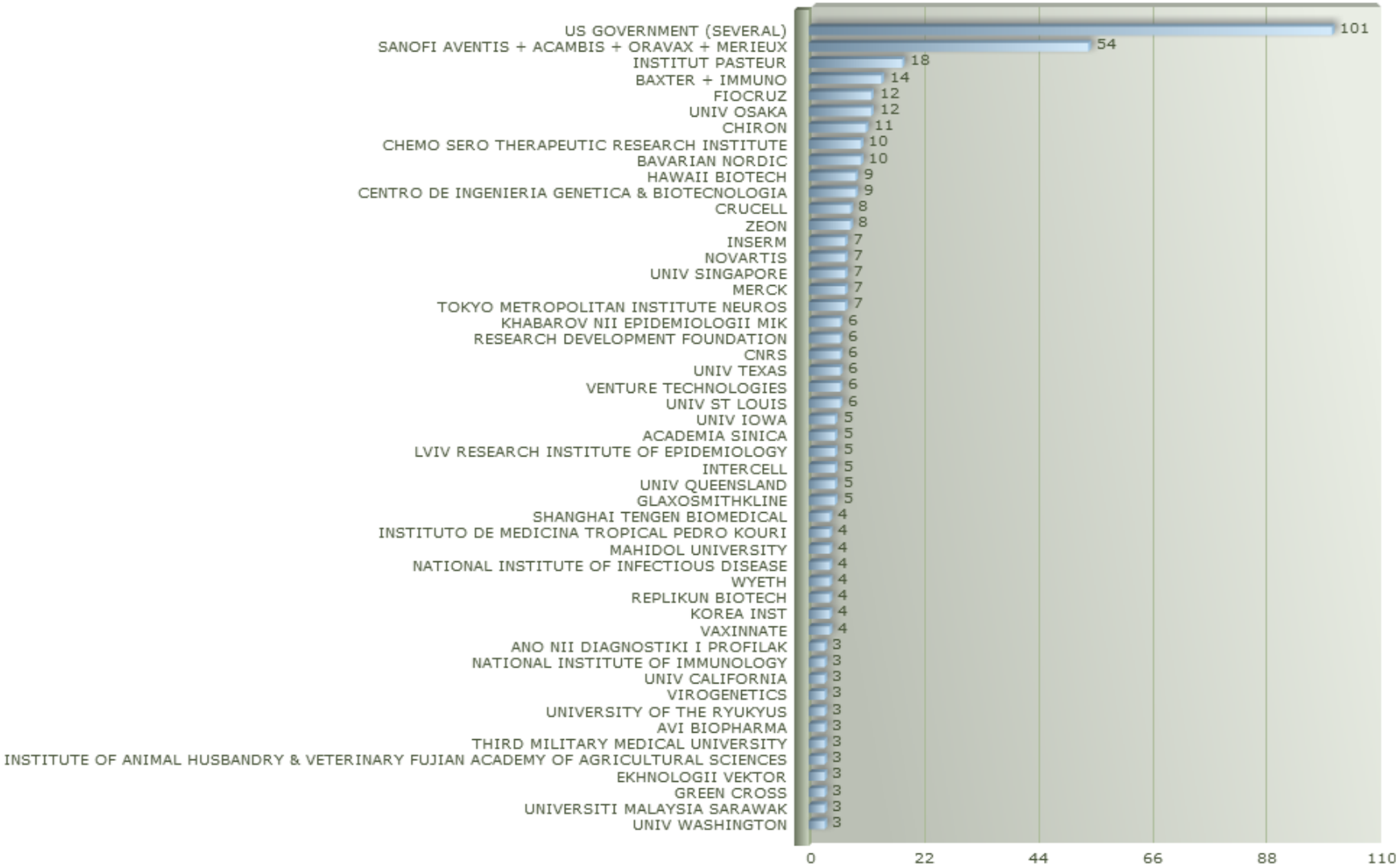

Flavivirus maiores depositantes evolução temporal

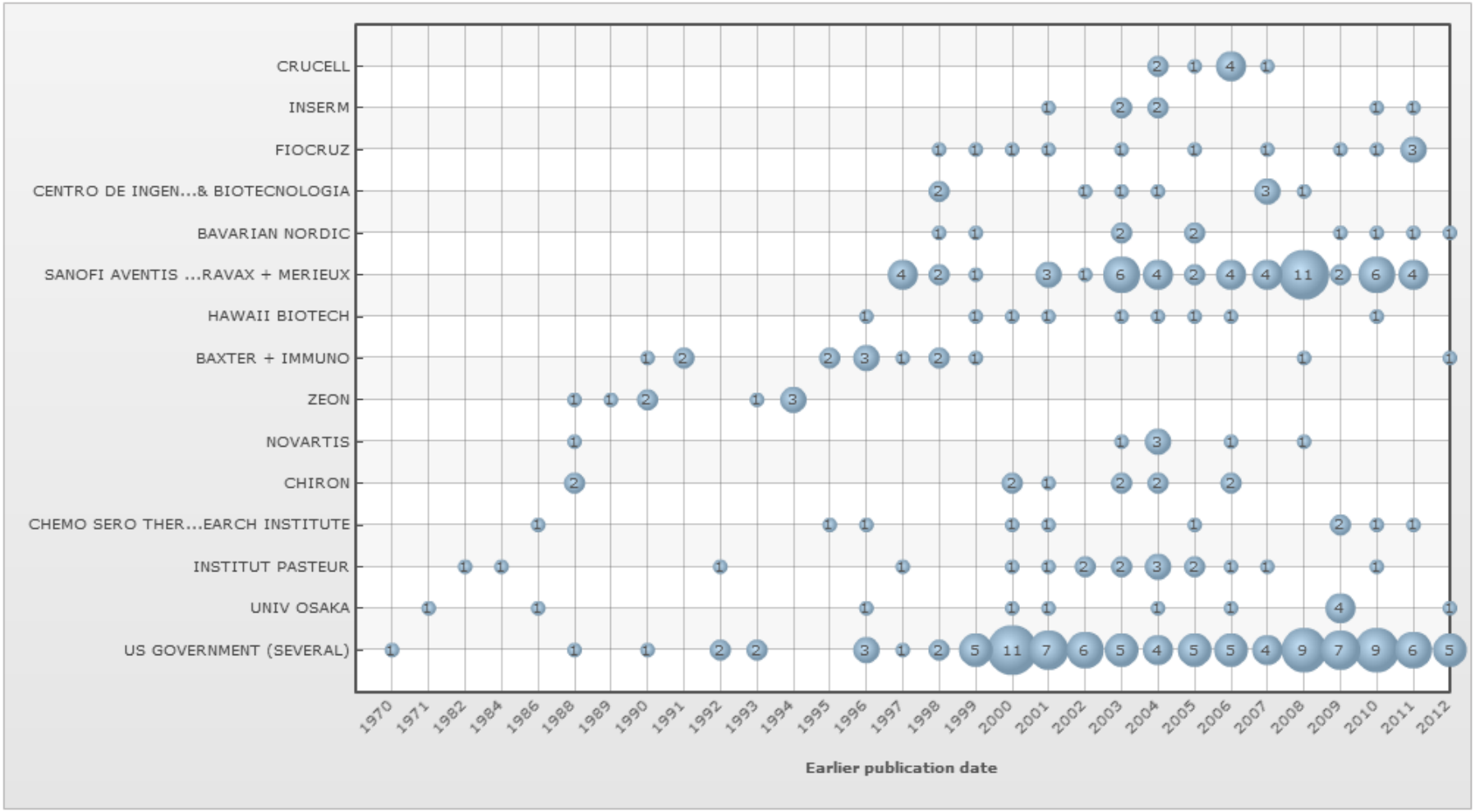

Flavivirus maiores depositantes cobertura geográfica

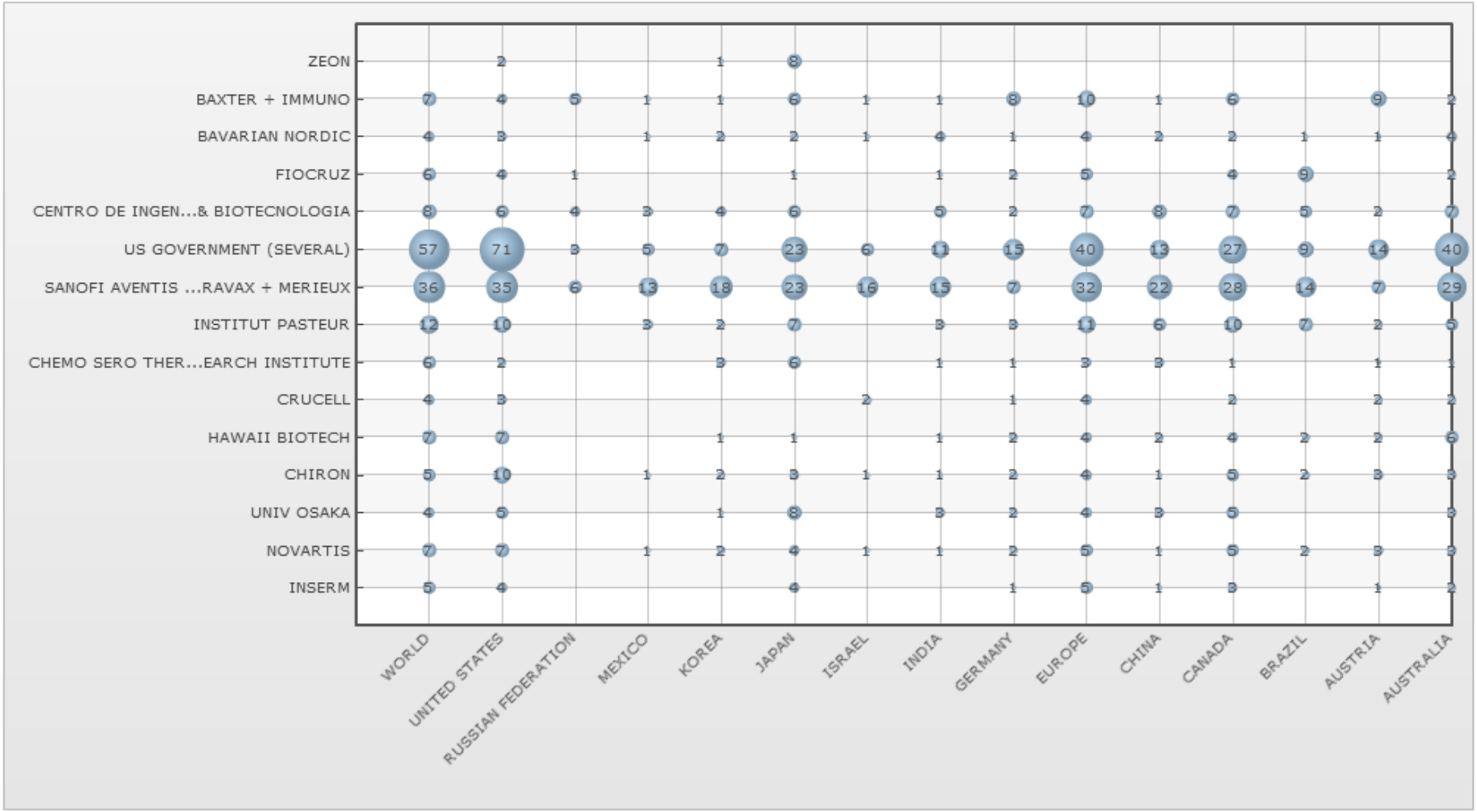

Em relação a notificações de estudos clínicos...

© 2013 www.axonal.com.br

CLINICAL TRIALS. GOV YELLOW FEVER.xlsx - Microsoft Excel

A1 | Rank

Rank	Phases	Start Ye	Sponsor/Collaborators	Title	Recr
1		2011	Emory University|Sri Edupuganti, MD MPH|University of California, Berkeley	Turnover of Antigen Specific Lymphocytes After Immunization With the Yellow Fever Vaccine	Recr
3	Phase 2	2011	Sanofi-Aventis|Sanofi-Aventis	Immune Response to Different Schedules of a Tetravalent Dengue Vaccine Given With or Without Yellow Fever Vaccine	Acti
4	Phase 3	2011	Sanofi-Aventis|Sanofi-Aventis	Study of Yellow Fever Vaccine Administered With Tetravalent Dengue Vaccine in Healthy Toddlers	Acti
5	Phase 3	2011	French National Institute for Health and Medical Research-French National Agency for Research on AIDS and Viral Hepatitis (Inserm-ANRS)|French National Agency for Research on AIDS and Viral Hepatitis	The Yellow Fever Vaccine Immunity in HIV Infected Patients : Development of New Assays for Virological and Immunological Monitoring in HIV Infected Patient.	Com
8	Phase 3	2011	Novartis|Novartis|Novartis Vaccines	A Phase 3b, Randomized, Open-Label Study to Evaluate the Safety and Immunogenicity of Select Travel Vaccines When Administered Concomitantly With MenACWY in Adults	Acti
6		2010	Emory University|Emory University	Immune Responses to Yellow Fever Vaccine	Enro
11	Phase 1	2010	Xcellerex, Inc.|Xcellerex, Inc.	Trial of Yellow Fever Inactivated Vaccine	Acti
5		2008	Emory University|Emory University	Human Immune Responses to The Yellow Fever Virus Vaccine	Recr
18		2007	Rockefeller University|Rockefeller University|Emory University	Characterization of T Cell Responses Following Yellow Fever Virus Vaccination in Healthy Adults	Com
2	Phase 1	2006	Emory University|Emory University|Sanofi Pasteur MSD|Centers for Disease Control and Prevention	Yellow Fever Virus Vaccine and Immune Globulin Study	Com
9	Phase 2	2004	Sanofi-Aventis|Sanofi-Aventis	Study of Live Attenuated Japanese Encephalitis Vaccine (ChimeriVaxâ„¢-JE) and Yellow Fever Vaccine (STAMARILÂ®)	Com

study_fields

Pronto | Modo de filtro | 100%

CLINICAL TRIALS. GOV DENGUE.xlsx - Microsoft Excel

Arquivo | Página Inicial | Inserir | Layout da Página | Fórmulas | Dados | Revisão | Exibição

Normal | Layout da Página | Visualização da Quebra de Página | Modos de Exibição Personalizados | Tela Inteira — Modos de Exibição de Pasta de Trabalho

Régua | Barra de Fórmulas | Linhas de Grade | Títulos — Mostrar

Zoom | 100% | Zoom na Seleção — Zoom

Nova Janela | Organizar Tudo | Congelar Painéis | Salvar Espaço de Trabalho | Alternar Janelas — Janela

Macros — Macros

A1 | Rank

	A	B	D	E	F	G	H	I	J	K	L	M	N	O
1	Rank	Start	Phase	Sponsor/Collaborators	Title	Recru	Study	Cond	Interv	Enroll	Start	Comp	Prima	URL
2	7	2012	Phase 2	Sanofi-Aventis|Sanofi-Aventis	Study of a Tetravalent Dengue Vaccine in Healthy Adult Subjects Aged 18 to 45 Years in India	Active, n	No Resu	Dengue|	Biologic	189	March 2	Decembe	Decembe	http://ClinicalTrials.gov/show/NCT01550289
3	47	2012	Phase 1	U.S. Army Medical Research and Materiel Command|U.S. Army Medical Research and Materiel Command|GlaxoSmithKline|Walter Reed Army Institute of Research (WRAIR)	A Two-dose Primary Vaccination Study of a Tetravalent Dengue Virus Purified Inactivated Vaccine vs. Placebo in Healthy Adults	Not yet r	No Resu	Dengue F	Biologic	100	Septemb	Decembe	Decembe	http://ClinicalTrials.gov/show/NCT01666652
4	48	2012	Phase 1	Merck|Merck	Study of a Dengue Vaccine (V180) in Healthy Adults (V180-001 AM1)	Recruitin	No Resu	Dengue	Biologic	120	July 201	Decembe	Decembe	http://ClinicalTrials.gov/show/NCT01477580
6	3	2011	Phase 2	Sanofi-Aventis|Sanofi-Aventis	Immune Response to Different Schedules of a Tetravalent Dengue Vaccine Given With or Without Yellow Fever Vaccine	Active, n	No Resu	Dengue|	Biologic	330	Decembe	June 201	June 201	http://ClinicalTrials.gov/show/NCT01488630
7	9	2011	Phase 3	Sanofi-Aventis|Sanofi-Aventis	Study of a Novel Tetravalent Dengue Vaccine in Healthy Children Aged 2 to 14 Years in Asia	Recruitin	No Resu	Dengue|	Biologic	10278	June 201	July 201	July 201	http://ClinicalTrials.gov/show/NCT01373281
8	10	2011	Phase 3	Sanofi-Aventis|Sanofi-Aventis	Study of a Novel Tetravalent Dengue Vaccine in Healthy Children and Adolescents Aged 9 to 16 Years in Latin America	Active, n	No Resu	Dengue F	Biologic	20875	June 201	August 2	August 2	http://ClinicalTrials.gov/show/NCT01374516
9	11	2011	Phase 3	Sanofi-Aventis|Sanofi-Aventis	Study of Yellow Fever Vaccine Administered With Tetravalent Dengue Vaccine in Healthy Toddlers	Active, n	No Resu	Dengue|	Biologic	732	Septemb	January 2	January 2	http://ClinicalTrials.gov/show/NCT01436396
10	12	2011	Phase 3	Sanofi-Aventis|Sanofi-Aventis	Study of a Booster Injection of Pentaximâ„¢ Vaccine Administered With Dengue Vaccine in Healthy Toddlers	Recruitin	No Resu	Dengue|	Biologic	732	July 2011	April 20	April 20	http://ClinicalTrials.gov/show/NCT01411241
11	18	2011	Phase 1	U.S. Army Medical Research and Materiel Command|U.S. Army Medical Research and Materiel Command|Vical|Walter Reed Army Institute of Research (WRAIR)|Naval Medical Research Center	Evaluation of the Safety and the Ability of a DNA Vaccine to Protect Against Dengue Disease	Active, n	No Resu	Dengue [	Biologic	40	Decembe	Decembe	Decembe	http://ClinicalTrials.gov/show/NCT01502358
12	46	2011	Phase 1	U.S. Army Medical Research and Materiel Command|U.S. Army Medical Research and Materiel Command	Safety Study of a Vaccine (DENV-1 PIV) to Prevent Dengue Disease	Active, n	No Resu	Dengue F	Biologic	20	Decembe	Septemb	Septemb	http://ClinicalTrials.gov/show/NCT01502735
14	13	2010	Phase 2	Sanofi-Aventis|Sanofi-Aventis	A Study of Dengue Vaccine in Healthy Toddlers Aged 12 to 15 Months in the	Active, n	No Resu	Dengue F	Biologic	210	January 2	Septemb	Septemb	http://ClinicalTrials.gov/show/NCT01064141
15	14	2010	Phase 3	Sanofi-Aventis|Sanofi-Aventis	Study of a Tetravalent Dengue Vaccine in Healthy Adults in Australia	Active, n	No Resu	Dengue F	Biologic	715	October	October	Novemb	http://ClinicalTrials.gov/show/NCT01134263
16	16	2010	Phase 2	Sanofi-Aventis|Sanofi-Aventis	Study of CYD Dengue Vaccine in Healthy Children and Adolescents in South America	Active, n	No Resu	Dengue|	Biologic	150	August 2	June 201	Decembe	http://ClinicalTrials.gov/show/NCT01187433
17	17	2010	Phase 3	Sanofi-Aventis|Sanofi-Aventis	Study of a Tetravalent Dengue Vaccine in Healthy Children Aged 2 to 11 Years in	Active, n	No Resu	Dengue F	Biologic	250	Decembe	January 2	January 2	http://ClinicalTrials.gov/show/NCT01254422
18	26	2010	Phase 1	National Institute of Allergy and Infectious Diseases (NIAID)|National Institute of Allergy and Infectious Diseases (NIAID)|Johns Hopkins Bloomberg School of Public Health	Evaluation of the Safety and Immune Response of Five Admixtures of a Tetravalent Dengue Virus Vaccine	Active, n	No Resu	Dengue	Biologic	140	July 2010			http://ClinicalTrials.gov/show/NCT01072786
19	32	2010	Phase 1	National Institute of Allergy and Infectious Diseases (NIAID)|National Institute of Allergy and Infectious Diseases (NIAID)	Tetravalent Chimeric Dengue Vaccine Trial	Complet	No Resu	Dengue	Drug: Pl:	72	May 201	April 20	April 20	http://ClinicalTrials.gov/show/NCT01110551
20	37	2010	Phase 1	National Institute of Allergy and Infectious Diseases (NIAID)|National Institute of Allergy and Infectious Diseases (NIAID)	Evaluation of the Safety and Immune Response to an Investigational Dengue Type 1 Vaccine	Active, n	No Resu	Dengue \	Biologic	18	April 2010			http://ClinicalTrials.gov/show/NCT01084231
21	38	2010	Phase 1	National Institute of Allergy and Infectious Diseases (NIAID)|National Institute of Allergy and Infectious Diseases (NIAID)	Safety and Immune Response to an Investigational Dengue Type 2 Vaccine	Complet	No Resu	Dengue \	Biologic	18	February	June 201	June 201	http://ClinicalTrials.gov/show/NCT01073306
22	45	2010	Phase 1	Inviragen Inc.|Inviragen Inc.	Safety and Immunogenicity Study to Assess DENVax, a Live Attenuated Tetravalent Vaccine for Prevention of Dengue Fever	Active, n	No Resu	Dengue F	Biologic	112	October	Septemb	June 201	http://ClinicalTrials.gov/show/NCT01224633

study_fields

Pronto | Modo de filtro | 55%

CLINICAL TRIALS. GOV WEST NILE.xlsx - Microsoft Excel

Arquivo | Página Inicial | Inserir | Layout da Página | Fórmulas | Dados | Revisão | Exibição

Normal | Layout da Página | Visualização da Quebra de Página | Modos de Exibição Personalizados | Tela Inteira — Modos de Exibição de Pasta de Trabalho

Régua | Barra de Fórmulas | Linhas de Grade | Títulos — Mostrar

Zoom | 100% | Zoom na Seleção — Zoom

Nova Janela | Organizar Tudo | Congelar Painéis | Salvar Espaço de Trabalho | Alternar Janelas — Janela

Macros — Macros

A1 | Rank

	A	B	D	E	F
1	Rank	Start Ye	Phases	Sponsor/Collaborators	Title
6	2	2008	Phase 1	Hawaii Biotech, Inc.|Hawaii Biotech, Inc.	Safety Study of HBV-002 West Nile Vaccine in Healthy Adults
7	3	2008	Phase 2	Sanofi-Aventis|Sanofi-Aventis	Safety and Immunogenicity Study of ChimeriVax West Nile Vaccine in Healthy Adults
8	5	2008	Phase 1	National Institute of Allergy and Infectious Diseases (NIAID)|National Institute of Allergy and Infectious Diseases (NIAID)|Johns Hopkins Bloomberg School of Public Health	Safety of and Immune Response to a West Nile Virus Vaccine (WN/DEN4delta30) in Healthy A
12	6	2006	Phase 1	National Institutes of Health Clinical Center (CC)|National Institute of Allergy and Infectious Diseases (NIAID)	Phase I Study of West Nile Virus Vaccine
15	1	2005	Phase 2	Sanofi-Aventis|Sanofi-Aventis	Safety and Immunogenicity of ChimeriVax-WN02 West Nile Vaccine in Healthy Adults
16	4	2005	Phase 1	National Institute of Allergy and Infectious Diseases (NIAID)|National Institute of Allergy and Infectious Diseases (NIAID)|Johns Hopkins Bloomberg School of Public Health	Safety of and Immune Response to a West Nile Virus Vaccine (WN/DEN4-3'delta30) in Health
17	7	2005	Phase 1	National Institutes of Health Clinical Center (CC)|National Institute of Allergy and Infectious Diseases (NIAID)	Vaccine to Prevent West Nile Virus Disease
20					
21					
22					
23					
24					

study_fields

Pronto | Modo de filtro | 100%

CLINICAL TRIALS. GOV JAPANESE ENCEPHALITIS.xlsx - Microsoft Excel

Arquivo | Página Inicial | Inserir | Layout da Página | Fórmulas | Dados | Revisão | Exibição

Normal | Layout da Página | Visualização da Quebra de Página | Modos de Exibição Personalizados | Tela Inteira — Modos de Exibição de Pasta de Trabalho

Régua | Barra de Fórmulas | Linhas de Grade | Títulos — Mostrar

Zoom | 100% | Zoom na Seleção — Zoom

Nova Janela | Organizar Tudo | Congelar Painéis | Salvar Espaço de Trabalho | Alternar Janelas — Janela

Macros — Macros

A1 | Rank

	A	B	D	E	F	G	H	I	J
1	Rank	Start Y	Phase	Sponsor/Collaborators	Title	Recru	Study	Condi	Interve
2	1	2012	Phase 4	Indian Institute of Science|Indian Institute of Science|National Institute of Mental Health and Neurosciences|University of Liverpool|Program for Appropriate Technology in Health|Wellcome Trust	A Prospective, Open Label Study of Human T Cell Responses to Live Attenuated Japanese Encephalitis Vaccine SA	Recruitin	No Resul	Japanes	Biologica
3	18	2012	Phase 3	Novartis|Novartis Vaccines	Safety and Immunogenicity of 2 Different Vaccination Schedules of Rabies and Japanese Encephalitis Vaccines in H	Not yet re	No Resul	Rabies|J.	Biologica
4	22	2012	Phase 4	Intercell AG|Intercell AG	Immune Response in IXIARO Batch JEV09L37 Recipients Before and After Revaccination	Not yet re	No Resul	Japanes	Biologica
5	45	2012	Phase 4	Program for Appropriate Technology in Health|Program for Appropriate Technology in Health	Lot-to-lot Consistency Trial of JE Live Attenuated SA 14-14-2 Vaccine	Not yet re	No Resul	Japanes	Biological:
7	24	2011		Intercell AG|Intercell AG	Safety Surveillance After Immunization With IXIARO	Recruitin	No Resul	Japanes	Biologica
8	29	2011	Phase 3	Novartis|Novartis|Novartis Vaccines	A Phase 3b, Randomized, Open-Label Study to Evaluate the Safety and Immunogenicity of Select Travel Vaccines V	Active, n	No Resul	Meningo	Biologica
9	38	2011	Phase 3	Sanofi-Aventis|Sanofi-Aventis	Study of a Live Attenuated Japanese Encephalitis Chimeric Virus Vaccine (IMOJEVâ„¢) Compared to CD.JEVAXâ„¢ i	Active, n	No Resul	Japanes	Biologica
11	7	2010	Phase 3	Mahidol University|Pornthep Chanthavanich|Liaoning Cheng Da Biotechnology Co., Ltd. China|Bionet-Asia Co., Ltd. Thailand	Immunogenicity and Safety of Inactivated Vero Cell Derived Japanese Encephalitis Vaccine in Thai Children	Active, n	No Resul	Encepha	Biologica
14	17	2010	Phase 3	Intercell AG|Intercell AG	Open-label, Randomized Study in a Pediatric Population in a JEV(Japanese Encephalitis Vaccine)-Endemic Country	Active, n	No Resul	Japanes	Biologica
15	31	2010	Phase 3	Boryung Pharmaceutical Co., Ltd|Boryung Pharmaceutical Co., Ltd|Seoul National University Hospital|Gachon University Gil Medical Center|Inha University Hospital|Inje University|Korea Cancer Center Hospital|Samsung Medical Center|The Catholic University of Korea|Ewha Womans University	Clinical Trial to Assess the Immunogenicity and Safety of the Vero Cell-derived JE Vaccine in Korea	Recruitin	No Resul	Japanes	Biologica
16	33	2010	Phase 3	Intercell AG|Intercell AG	Long Term Immunity and Safety Following Vaccination With the JEV IC51(IXIAROÂ®, JESPECTÂ®) in Pediatric Popul	Recruitin	No Resul	Japanes	Procedu
17	35	2010	Phase 3	Sanofi-Aventis|Sanofi-Aventis	A Study of Japanese Encephalitis Chimeric Virus Vaccine Compared With SA14-14-2 Vaccine in Infants and Toddlers	Complete	No Resul	Encepha	Biologica
18	39	2010	Phase 3	Sanofi-Aventis|Sanofi-Aventis	Study of Japanese Encephalitis Chimeric Virus Vaccine Given With Measles-Mumps-Rubella Vaccine in Taiwanese T	Active, n	No Resul	Japanes	Biologica
19	40	2010	Phase 3	Sanofi-Aventis|Sanofi-Aventis	Study of Japanese Encephalitis Chimeric Virus Vaccine (JE-CV) in Children Previously Immunized With JE-CV	Active, n	No Resul	Japanes	Biologica
20	47	2010	Phase 4	Intercell AG|Intercell AG	This is a Study to Assess the Safety and Immunogenicity of IxiaroÂ® (IC51) in an Elderly Population	Complete	No Resul	Japanes	Biologica
21	48	2010		Mennonite Christian Hospital|Mennonite Christian Hospital	Seroepidemiology of Japanese Encephalitis Virus Infection in Hualien, Taiwan	Enrolling	No Resul	Japanese	Encepha
23	43	2009	Phase 3	Sanofi-Aventis|Sanofi-Aventis	Long-term Follow-up of Immunogenicity of a Single Dose of Japanese Encephalitis Chimeric Virus Vaccine in Toddler	Enrolling	No Resul	Encephalitis|Japar	
24	2	2008	Phase 3	Sanofi-Aventis|Sanofi-Aventis	Study of ChimeriVaxâ„¢-Japanese Encephalitis Vaccine in Toddlers in Thailand and the Philippines	Complete	No Resul	Japanes	Biologica

study_fields

Pronto | Modo de filtro | 70%

Em relação a publicações técnicas...

© 2013 www.axonal.com.br

Results for Search Question:

yellow fever

Save these search terms for future use

4617 answers in BIOSIS
499 answers in BIOTECHNO
2669 answers in CABA
2574 answers in CAplus
6926 answers in EMBASE
1031 answers in ESBIOBASE
2 answers in KOSMET
4611 answers in MEDLINE
1252 answers in PASCAL
3560 answers in SCISEARCH
27741 total hits
[Hide Database Info.]

Too many answers? Refine Your Search

Clear	Titles from BIOSIS in Most Recent Order | Best Match Order
1	Proteomic Biomarkers for Ageing the Mosquito Aedes aegypti to Determine Risk of Pathogen Transmission. [$3.45]
2	Electrophysiology of the isolated and perfused midgut of adult female **yellow fever** mosquitoes (Aedes aegypti). [$3.45]
3	Inhibition of strong midgut alkalinization in larval **yellow fever** mosquitoes (Aedes aegypti) with HEPES buffer. [$3.45]
4	The effect of targeted silencing of ferritin in the **yellow fever** mosquito, Aedes aegypti. [$3.45]
5	Identification and characterization of a novel ferritin subunit from Aedes aegypti. [$3.45]
6	The effect of bacterial challenge on ferritin regulation in Aedes aegypti. [$3.45]
7	PROBLEMS OF MEDICAL PARASITOLOGY. [$3.45]
8	SCANNING ELECTRON MICROSCOPY OF EGGS OF SABETHES CYANEUS. [$3.45]
9	Active assessment of adverse events following **yellow fever** vaccination of persons aged 60 years and more. [$3.45]
10	The other half of the insect SLC4 family: a Cl/HCO3 anion exchanger from mosquito renal tubules. [$3.45]
11	Evolution of resistance to satyrization through reproductive character displacement in populations of invasive dengue vectors. [$3.45]

Results for Search Question:

yellow fever AND Title: yellow fever and vaccin?

Save these search terms for future use

428 answers in BIOSIS
73 answers in BIOTECHNO
286 answers in CABA
183 answers in CAplus
709 answers in EMBASE
169 answers in ESBIOBASE
0 answers in KOSMET
538 answers in MEDLINE
205 answers in PASCAL
383 answers in SCISEARCH
2974 total hits
[Hide Database Info.]

Too many answers? Refine Your Search Show Duplicates

Clear	Titles from BIOSIS in Most Recent Order | Best Match Order
1	Active assessment of adverse events following **yellow fever vaccination** of persons aged 60 years and more. [$3.45]
2	The Synergistic Effect of Combined Immunization with a DNA **Vaccine** and Chimeric **Yellow Fever**/Dengue Virus Leads to Strong Protection against Dengue. [$3.45]
3	Safety and Immunogenicity of **Yellow Fever Vaccine** in Patients Receiving Systemic Corticosteroid Therapy: An Observational Cohort Study. [$3.45]
4	Identification of three H-2K(d) restricted CTL epitopes of NS4A and NS4B protein from **Yellow fever** 17D **vaccine**. [$3.45]
5	T-Cell Memory Responses Elicited by **Yellow Fever Vaccine** are Targeted to Overlapping Epitopes Containing Multiple HLA-I and -II Binding Motifs. [$3.45]
6	A Randomized, Double-Blind, Controlled Trial of the 17D **Yellow Fever** Virus **Vaccine** Given in Combination with Immune Globulin or Placebo: Comparative Viremia and Immunogenicity. [$3.45]
7	17DD and 17D-213/77 **Yellow Fever** Substrains Trigger a Balanced Cytokine Profile in Primary **Vaccinated** Children. [$3.45]
8	Detection of Anti-**Yellow Fever** Virus Immunoglobulin M Antibodies at 3-4 Years Following **Yellow Fever Vaccination**. [$3.45]
	Quality control for **yellow fever vaccines** used in the Brazilian National Immunization Program.

Results for Search Question:

yellow fever AND Title: yellow fever and vaccin?

Save these search terms for future use

428 answers in BIOSIS
73 answers in BIOTECHNO
286 answers in CABA
183 answers in CAplus
709 answers in EMBASE
169 answers in ESBIOBASE
538 answers in MEDLINE
205 answers in PASCAL
383 answers in SCISEARCH
2974 total hits
[Hide Database Info.]

Too many answers? Refine Your Search

Clear	Titles from BIOSIS in Most Recent Order | Best Match Order
1	Active assessment of adverse events following **yellow fever vaccination** of persons aged 60 years and more. [$3.45] This answer is also in EMBASE, SCISEARCH
2	The Synergistic Effect of Combined Immunization with a DNA **Vaccine** and Chimeric **Yellow Fever**/Dengue Virus Leads to Strong Protection against Dengue. [$3.45]
3	Safety and Immunogenicity of **Yellow Fever Vaccine** in Patients Receiving Systemic Corticosteroid Therapy: An Observational Cohort Study. [$3.45]
4	Identification of three H-2K(d) restricted CTL epitopes of NS4A and NS4B protein from **Yellow fever** 17D **vaccine**. [$3.45] This answer is also in CABA, CAPLUS, EMBASE, ESBIOBASE, MEDLINE, PASCAL, SCISEARCH
5	T-Cell Memory Responses Elicited by **Yellow Fever Vaccine** are Targeted to Overlapping Epitopes Containing Multiple HLA-I and -II Binding Motifs. [$3.45]
6	A Randomized, Double-Blind, Controlled Trial of the 17D **Yellow Fever** Virus **Vaccine** Given in Combination with Immune Globulin or Placebo: Comparative Viremia and Immunogenicity. [$3.45] This answer is also in CABA, EMBASE, MEDLINE, SCISEARCH
7	17DD and 17D-213/77 **Yellow Fever** Substrains Trigger a Balanced Cytokine Profile in Primary **Vaccinated** Children. [$3.45]
8	Detection of Anti-**Yellow Fever** Virus Immunoglobulin M Antibodies at 3-4 Years Following **Yellow Fever Vaccination**. [$3.45]

Em relação a informações sobre esforços de P&D de terceiros...

© 2013 www.axonal.com.br

Exemplo: Flavivirus (ADIS R&D Insight)

	A	B	C	E
1	PRODUCT NAME	COMPANY	HIGHEST DEVPT PHASE	DATABASE
12	BERNA-YF; FLAVIMUN(R); YELLOW FEVER VACCINE - CRUCELL; attenuated yellow fever (YF) vaccine of the 17D strain	CRUCELL; BERNA BIOTECH	03. PREREGISTRATION	ADISINSIGHT
13	JAPANESE ENCEPHALITIS VACCINE - BORYUNG PHARMACEUTICAL; KD 287; KD-287; VERO CELL-DERIVED INACTIVATED JAPANESE ENCEPHALITIS VACCINE KD-287	BORYUNG PHARMACEUTICAL; BORYUNG	04. PHASE III	ADISINSIGHT
14	CHIMERIVAX-DENGUE; ATTENUATED; CHIMERIVAX(TM) TETRAVALENT DENGUE VACCINE; CHIMERIVAX(TM)-DEN1-4; CYD DENGUE VACCINE; DENGUE SEROTYPE 1; DENGUE VACCINE TETRAVALENT - SANOFI; LIVE; TETRAVALENT DENGUE VACCINE; 2; 3; 4 VIRUS VACCINE	SANOFI PASTEUR; ACAMBIS; INTERNATIONAL VACCINE INSTITUTE	04. PHASE III	ADISINSIGHT
15	JAPANESE ENCEPHALITIS VACCINE - BHARAT BIOTECH; JENVAC	BHARAT BIOTECH	05. PHASE II	ADISINSIGHT
16	CHIKUNGUNYA VIRUS VACCINE - INVIRAGEN; CHIKV - INVIRAGEN	INVIRAGEN; SINGVAX; DUKE-NUS GRADUATE MEDICAL SCHOOL SINGAPORE	05. PHASE II	ADISINSIGHT
17	DENVAX(TM); NEEDLE-FREE DENGUE VACCINE; TETRAVALENT HYBRID DENGUE VIRUS VACCINE - INVIRAGEN/CDC/NIAID. DENVax is a tetravalent (four-component) combination vaccine containing the original attenuated DEN-2 PDK-53 vaccine and each of the chimeric vaccines (DEN-2/1, DEN-2/3 and DEN-2/4).	INVIRAGEN; CENTERS FOR DISEASE CONTROL AND PREVENTION; NATIONAL INSTITUTE OF ALLERGY AND INFECTIOUS DISEASES; NATIONAL INSTITUTES OF HEALTH (USA); DUKE-NUS GRADUATE MEDICAL SCHOOL SINGAPORE; PHARMAJET; UNIVERSITY OF	05. PHASE II	ADISINSIGHT
18	DENGUE VACCINE - GLAXOSMITHKLINE	WALTER REED ARMY INSTITUTE OF RESEARCH; GLAXOSMITHKLINE; OSWALDO CRUZ FOUNDATION	05. PHASE II	ADISINSIGHT
19	HILTONOL(R); P.I.C.L.C.; POLY ICLC; POLY-ICLC; POLYINOSINIC POLYCYTIDYLIC ACID; POLYRIBOINOSINIC-POLYRIBOCYTIDYLIC ACID-POLYLYSINE CARBOXYMETHYLCELLULOSE; POLYRIBOINOSINIC-POLYRIBOCYTIDYLIC ACID	ONCOVIR; NATIONAL CANCER INSTITUTE (USA); UNIVERSITY OF PITTSBURGH	05. PHASE II	ADISINSIGHT

Em relação a notícias...

© 2013 www.axonal.com.br

STNEasy

Answer Page

Easy Search
Advanced Search
CAS Number Search
Patent Lookup

Review Saved Items

+ Help
Session Cost
Price List
Preferences
Search History
+ Cust. Support
Comments
Log Off

Answer Page

Results for Search Question:

vaccin? AND Publication Year: 2012-current AND yellow fever

Save **these search terms for future use**

3 answers in CBNB
0 answers in CIN
3 total hits
[Hide Database Info.]

Too many answers? Refine Your Search

Clear	**Titles from CBNB** in **Most Recent Order** | Best Match Order
1	Successful **vaccine** developments at Themis Bioscience, Pasteur Institute Technology proves its effective potential. [$7.60]
2	iBio selects proprietary recombinant C1 inhibitor for clinical development. [$7.60]
3	Sanofi Pasteur's Val-de-Reuil site increase **yellow fever vaccines** capacity. Sanofi Pasteur Val-de-Reuil monte en puissance contre la fievre jaune. [$7.60]

[Page 1]

Display Selection Selected on all pages Display Format Standard Plus Display Style STN

Display Answers

STNEasy

Answer Page

Easy Search
Advanced Search
CAS Number Search
Patent Lookup

Review Saved Items

+ Help
Session Cost
Price List
Preferences
Search History
+ Cust. Support
Comments
Log Off

Answer Page

Results for Search Question:

vaccin? AND Publication Year: 2012-current AND west nile

Save **these search terms for future use**

7 answers in CBNB
0 answers in CIN
7 total hits
[Hide Database Info.]

Too many answers? Refine Your Search

Clear	**Titles from CBNB** in **Most Recent Order** | Best Match Order
1	Hawaii Biotech Gains Rights to **West Nile Vaccine** Technology From Merck. [$7.60]
2	Hawaii Biotech Inc gains rights to **West Nile vaccine** technology from Merck & Co Inc. [$7.60]
3	News and press releases: Committee for Medicinal Products for Veterinary Use (CVMP) Meeting of 9-11 Apr 2013: CVMP opinions on veterinary medicinal products. [$7.60]
4	Pending EC decision: Equilis **West Nile**, inactivated chimeric Flavivirus strain YF-WN. Opinion date: 11-Apr-2013. [$7.60]
5	Successful **vaccine** developments at Themis Bioscience, Pasteur Institute Technology proves its effective potential. [$7.60]
6	News and press releases: Committee for Medicinal Products for Veterinary Use (CVMP) meeting of 8-10 Jan 2013: Pharmacovigilance. [$7.60]
7	News and press releases: Committee for Medicinal Products for Veterinary Use (CVMP) meeting of 10-12 Jul 2012: Pharmacovigilance. [$7.60]

[Page 1]

Display Selection Selected on all pages Display Format Standard Plus Display Style STN

STNEasy

Answer Page

Easy Search
Advanced Search
CAS Number Search
Patent Lookup

Review Saved Items

+ Help
Session Cost
Price List
Preferences
Search History
+ Cust. Support
Comments
Log Off

Results for Search Question:

vaccin? AND Publication Year: 2012-current AND japanese encephalitis

Save **these search terms for future use**

39 answers in CBNB
0 answers in CIN
39 total hits
[Hide Database Info.]

Too many answers? Refine Your Search

Clear	**Titles from CBNB** in **Most Recent Order** | Best Match Order
1	Successful **vaccine** developments at Themis Bioscience, Pasteur Institute Technology proves its effective potential. [$7.60]
2	Intercell AG announces 4Q and preliminary full year 2012 financial results and business update: Business highlights: Solid IXIARO/JESPECT sales growth performance. [$7.60]
3	Indian Immunologicals to develop Chikungunya and **Japanese encephalitis vaccines**. [$7.60]
4	Intercell announces pediatric approval of its **Japanese Encephalitis vaccine** in Europe. [$7.60]
5	Vabiotech licenses Inviragen technology for **Japanese encephalitis vaccine** production. [$7.60]
6	Bharat Bio to launch **Japanese encephalitis vaccine** by Apr 2013. [$7.60]
7	Proposed Merger of Equals between Vivalis and Intercell - Creation of a European biotech leader in **vaccines** and antibodies. [$7.60]
8	Intercell receives CHMP positive opinion for the pediatric indication of its **Japanese Encephalitis vaccine** in Europe. [$7.60]
9	JEEV Infusing life into humanity. [$7.60]
10	Vivalis to buy Intercell AG in European biotech merger for $174 M. [$7.60]
11	**Vaccine** producer Intercell and Vivalis merge. Impfstoffhersteller Intercell und Vivalis fusionieren. [$7.60]
12	Sanofi Pasteur launches next generation **Japanese encephalitis vaccine** in Thailand. [$7.60]
13	Sanofi Pasteur launches **Japanese encephalitis vaccine** in Australia. [$7.60]
14	Sanofi Pasteur launches Imojev first single-dose **vaccine** against **Japanese encephalitis** in

Results for Search Question:

vaccin? AND Publication Year: 2012-current AND dengue

Save **these search terms for future use**

23 answers in CBNB
1 answers in CIN
24 total hits
[Hide Database Info.]

Too many answers? Refine Your Search

Clear	**Titles from CBNB** in **Most Recent Order** | Best Match Order
1	Participation in Global Health Innovative Technology Fund (GHIT Fund). [$7.60]
2	A*STAR: Australia and Singapore join forces to tackle emerging infectious diseases. [$7.60]
3	VaxInnate awarded US grant to develop recombinant **vaccine** for **dengue**. [$7.60]
4	Successful **vaccine** developments at Themis Bioscience, Pasteur Institute Technology proves its effective potential. [$7.60]
5	Nagasaki University and Astellas launch collaborative research for screening new anti-**dengue** virus drugs for neglected tropical diseases. [$7.60]
6	European **vaccines** market poised for growth. [$7.60]
7	**Dengue** fever **vaccine** proves effective. [$7.60] This answer is also in CIN
8	Sanofi Pasteur obtains mixed results for **dengue vaccine** trial. **Vaccins**: resultats mitiges de Sanofi Pasteur contre la **dengue**. [$7.60]
9	**Dengue** weapons. [$7.60]
10	Sanofi Pasteur announces publication in The Lancet of world's first efficacy results for its **dengue vaccine** candidate. [$7.60]
11	Sanofi (France) **dengue vaccine** less effective than hoped. [$7.60]
12	Sanofi (France)'s world first **dengue vaccine** beats 3 virus strains. [$7.60]

STNEasy

Answer Page

Easy Search
Advanced Search
CAS Number Search
Patent Lookup

Review Saved Items

+ Help
Session Cost
Price List
Preferences
Search History
+ Cust. Support
Comments
Log Off

8	Sanofi Pasteur obtains mixed results for **dengue vaccine** trial. **Vaccins**: resultats mitiges de Sanofi Pasteur contre la **dengue**. [$7.60]
9	**Dengue** weapons. [$7.60]
10	Sanofi Pasteur announces publication in The Lancet of world's first efficacy results for its **dengue vaccine** candidate. [$7.60]
11	Sanofi (France) **dengue vaccine** less effective than hoped. [$7.60]
12	Sanofi (France)'s world first **dengue vaccine** beats 3 virus strains. [$7.60]
13	Sanofi (France)'s world first **dengue vaccine** beats 3 virus strains. [$7.60]
14	Panacea Biotec: Hard hit by WHO. [$7.60]
15	BioDiem licenses hepatitis **vaccine** tech from UC [$7.60]
16	BioDiem sets sights on **dengue** fever **vaccine**. [$7.60]
17	BioDiem closes **dengue** fever deal. [$7.60]
18	BioDiem, ANU sign **Dengue** fever **vaccine** technology agreement. [$7.60]
19	BioDiem Ltd signs full agreement with Australian National University for **dengue** fever **vaccine** technology. [$7.60]
20	Australian National University to Grant BioDiem Ltd exclusive licence for novel technology to target infectious diseases. [$7.60]
21	BioNet shifts strategy to new multipurpose **vaccines**. [$7.60]
22	MNCs circle, descend on Indian **vaccine** market: Introduction of immunisation programme and aggressive product rollout by domestic firms are prompting MNCs to strengthen presence. [$7.60]
23	US Navy advances **dengue** DNA **vaccine** using Vical Inc's vaxfectin adjuvant. [$7.60]
	Titles from CIN in **Most Recent Order**
24	**Dengue** fever **vaccine** proves effective [$6.10] This answer is also in CBNB

[Page 1]

Display Selection Selected on all pages Display Format Standard Plus Display Style STN

Display Answers

+You Search Images Mail Drive Calendar Sites Groups Maps More

Google US Navy Advances Dengue DNA Vaccine Using Vical Inc Vaxfectin Adjuvant suzuki@marcelinosuzuki.com

Web Images Maps Shopping More Search tools

About 1,480 results (0.15 seconds)

Ad related to **US Navy Advances Dengue DNA Vaccine Using ...**

Dengue Antigen - Microbix.com
www.microbix.com/**dengue**
High Quality Native **Dengue** Antigens Fast Shipping! Expert Virologists.

US Navy Advances Dengue DNA Vaccine Using Vical's ... - **Vical, I**...
www.**vical**.com/.../**US-Navy-Advances-Dengue-DNA-Vaccine-Using-Vic**...
Mar 5, 2012 – **U.S. Navy Advances Dengue DNA Vaccine Using Vical's ... dengue DNA vaccine** formulated **with** the company's **Vaxfectin® adjuvant**. The trial ...

US Navy Advances Dengue DNA Vaccine Using Vical ... - Reuters
www.reuters.com/finance/stocks/VICL.O/key-developments/.../2494421
Mar 5, 2012 – **U.S. Navy Advances Dengue DNA Vaccine Using Vical Inc's ... dengue DNA vaccine** formulated **with** the company's **Vaxfectin adjuvant**.

Vical Inc (VICL.O) Key Developments | Reuters.com
www.reuters.com/finance/stocks/VICL.O/key-developments
U.S. Navy Advances Dengue DNA Vaccine Using Vical Inc's Vaxfectin Adjuvant
Monday, 5 Mar 2012 06:30am EST. Vical Inc announced that the Naval Medical ...

Vical Says **U.S. Navy Advances Dengue DNA Vaccine Using** Its ...
www.rttnews.com/.../**vical**-says-u-s-**navy-advances-dengue-dna-vaccine**-...
Mar 5, 2012 – **Vical Inc**. (VICL) said the Naval Medical Research Center, or NMRC, has ... Vical Says **U.S. Navy Advances Dengue DNA Vaccine Using** Its **Vaxfectin Adjuvant ... DNA vaccine** formulated **with** the company's **Vaxfectin adjuvant**.

Vical Says **US Navy Advances Dengue DNA Vaccine Using** Its ...
www.patriotfiles.com › The Patriot Files Forums › Military News › Navy
Mar 5, 2012 - 2 posts
Vical Says **US Navy Advances Dengue DNA Vaccine Using** Its **Vaxfectin Adjuvant**
RTT News (RTTNews) - **Vical Inc**. (VICL: News) said the ...

U.S. Navy Advances Dengue DNA Vaccine Using Vical's Vaxfectin® Adjuvant

03/05/2012

SAN DIEGO, March 5, 2012 (GLOBE NEWSWIRE) -- Vical Incorporated (Nasdaq:VICL) today announced that the Naval Medical Research Center (NMRC) has initiated a Phase 1 human clinical trial of a tetravalent dengue DNA vaccine formulated with the company's Vaxfectin® adjuvant. The trial is based on exciting efficacy data from a nonhuman primate study recently published in the journal *Vaccine*[1]. Vical manufactured the vaccine and the adjuvant for both the preclinical and clinical studies, and is providing regulatory and clinical expertise to NMRC for the dengue program.

Vical completed three prior Phase 1 trials, with no safety issues and no dose-limiting toxicity, of Vaxfectin®-formulated DNA vaccines against H5N1 and H1N1 pandemic influenza.

Under a prior Collaborative Research and Development Agreement (CRADA) with Vical, NMRC developed a tetravalent DNA vaccine (TVDV) containing genes encoding the pre-membrane (prM) and envelope (E) proteins for all four serotypes of dengue virus, and formulated with Vical's Vaxfectin® adjuvant. Both Vaxfectin®-formulated and unformulated vaccines are now being evaluated in Phase 1 human testing. A total of 40 subjects will be assigned to three dose groups: a low dose TVDV without adjuvant, a low dose TVDV with Vaxfectin® adjuvant, or a high dose TVDV with Vaxfectin® adjuvant. Vaccines will be administered by intramuscular injections on days 0, 30 and 90, with follow-up through approximately one year. Key endpoints in the trial will be safety and immunogenicity.

The recently published preclinical TVDV immunogenicity and challenge data indicated that Vaxfectin® significantly improved neutralizing antibody responses and significantly enhanced protection against challenge. Nonhuman primates received the tetravalent DNA vaccine, formulated with or without the Vaxfectin® adjuvant, or a blank DNA control, on days 0, 28, and 84. All four (100%) rhesus macaques receiving the Vaxfectin®-formulated vaccine developed neutralizing antibodies to all four serotypes of dengue by one month after the second injection, compared with none of the four (0%) macaques receiving the unformulated vaccine and none of the three (0%) unvaccinated control animals. By one month after the third injection, all (100%) macaques in both vaccine groups (Vaxfectin®-formulated and unformulated) developed neutralizing antibodies to all four serotypes of dengue, compared with none (0%) of the unvaccinated control animals.

Em relação a opiniões de experts...

© 2013 www.axonal.com.br

E daí?

- Quais são os objetivos da instituição?
- Quais são as perguntas a serem respondidas?

© 2013 www.axonal.com.br

AXONAL.

Leitura Recomendada

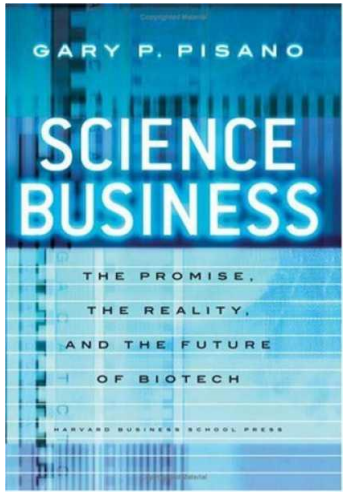

Science Business

Gary Pisano

Patent It Yourself

David Pressman

© 2016 www.axonal.com.br

Leitura Recomendada

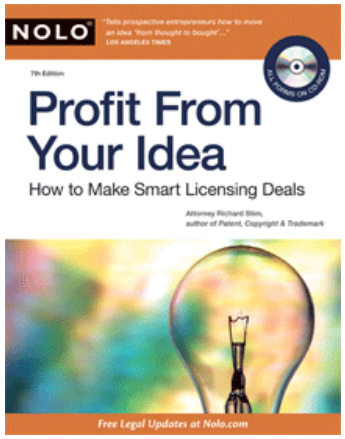

Profit From Your Idea

Richard Stim

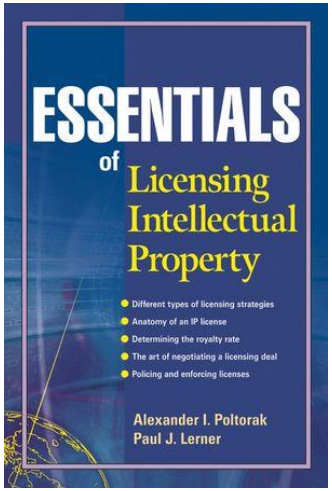

Essentials of Licensing Intellectual Property

Alexander Poltorak & Paul Lerner

© 2016 www.axonal.com.br

Leitura Recomendada

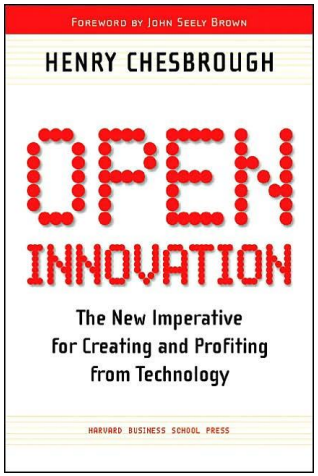

Open Innovation
Henry Chesbrough

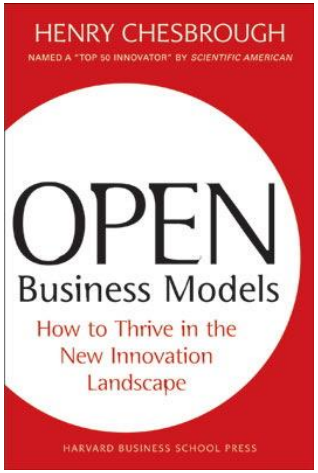

Open Business Models
Henry Chesbrough

© 2016 www.axonal.com.br

Muito obrigado pela atenção!

Henry Suzuki
henry.suzuki@axonal.com.br

Axonal Consultoria Tecnológica Ltda.
www.axonal.com.br

© 2016 www.axonal.com.br

Oficina: Inovação Farmacêutica & Propriedade Intelectual

Universidade Federal do Ceará
Núcleo de Pesquisa e Desenvolvimento de Medicamentos
Fortaleza, CE
10 de abril de 2017

Apoiadores

Mantenedores da Academia Nacional de Farmácia